Polo Estate 1998 ➤

4-Cyl. injection engine (2 valve), Mechanics									
Engine ID	AFT	1F	ADZ						

Edition 11.1995

Protected by copyright. Copying for private or commercial purposes, in part or in whole, is not permitted unless authorised by Volkswagen AG. Volkswagen AG does not guarantee or accept any liability with respect to the correctness of information in this document. Copyright by Volkswagen AG.

satelettronica

List of Workshop Manual Repair GroupsList of Workshop Manual Repair GroupsList of Workshop Manual Repair Groups

Polo Estate 1998 ➤

4-Cyl. injection engine (2 valve), Mechanics

Repair Group

00 - Technical data
10 - Removing and installing engine
13 - Crankshaft group
15 - Cylinder head, Valve gear
17 - Lubrication
19 - Cooling system
20 - Fuel supply system
26 - Exhaust system

Technical information should always be available to the foremen and mechanics, because their careful and constant adherence to the instructions is essential to ensure vehicle road-worthiness and safety. In addition, the normal basic safety precautions for working on motor vehicles must, as a matter of course, be observed.

All rights reserved.
No reproduction without prior agreement from publisher.

Copyright © 2011 Volkswagen AG, Wolfsburg

Protected by copyright. Copying for private or commercial purposes, in part or in whole, is not permitted unless authorised by Volkswagen AG. Volkswagen AG does not guarantee or accept any liability with respect to the correctness of information in this document. Copyright by Volkswagen AG.

satelettronica

Contents

00 - Technical data 1
1 Technical data 1
1.1 Technical data 1
1.2 Engine number 1
1.3 Engine data 1

10 - Removing and installing engine 3
1 Removing and installing engine 3
1.1 Removing and installing engine 3
1.2 Notes on removing 3
1.3 Notes on installing 5
1.4 Tightening torques 6
1.5 Assembly mountings 7
1.6 Renewing engine carrier rubber mounting 8
1.7 Additional information and removal instructions for vehicles with air conditioner 9

13 - Crankshaft group 10
1 Dismantling and assembling engine 10
1.1 Dismantling and assembling engine 10
1.2 Removing and installing ribbed belt 21
1.3 Removing and installing toothed belt 24
2 Removing and installing sealing flange and pressure plate/drive plate 29
2.1 Removing and installing sealing flange and pressure plate/drive plate 29
2.2 Removing and installing drive plate 32
2.3 Renewing crankshaft oil seal - pulley end - 34
3 Removing and installing crankshaft 36
3.1 Removing and installing crankshaft 36
3.2 Crankshaft dimensions 38
4 Dismantling and assembling pistons and conrods 39
4.1 Dismantling and assembling pistons and conrods 39
4.2 Piston and cylinder dimensions 45

15 - Cylinder head, Valve gear 46
1 Removing and installing cylinder head 46
1.1 Removing and installing cylinder head 46
1.2 Removing and installing cylinder head 53
1.3 Checking compressions 54
2 Servicing valve gear 55
2.1 Servicing valve gear 55
2.2 Reworking valve seats 65
2.3 Removing and installing camshaft oil seal 67
2.4 Removing and installing camshaft 68
2.5 Checking hydraulic bucket tappets 70
2.6 Checking valve guides 71
2.7 Renewing valve guides 71
2.8 Renewing valve stem seals 72

17 - Lubrication 74
1 Removing and installing parts of the lubrication system 74
1.1 Removing and installing parts of the lubrication system 74
1.2 Checking oil pressure and oil pressure switch 81

19 - Cooling system 83

Protected by copyright. Copying for private or commercial purposes, in part or in whole, is not permitted unless authorised by Volkswagen AG. Volkswagen AG does not guarantee or accept any liability with respect to the correctness of information in this document. Copyright by Volkswagen AG.
satelettronica

1 Removing and installing parts of cooling system 83
1.1 Removing and installing parts of cooling system 83
1.2 Parts of cooling system body side 84
1.3 Parts of cooling system - engine side 87
1.4 Dismantling and assembling coolant pump 93
1.5 Draining and filling cooling system 95
1.6 Removing and installing radiator and radiator fan 97

20 - Fuel supply system 98
1 Removing and installing parts of fuel supply system 98
1.1 Removing and installing parts of fuel supply system 98
1.2 Removing and installing fuel tank with its attachments 99
1.3 Safety precautions when working on the fuel supply system 109
1.4 Rules for cleanliness 110
1.5 Adjusting throttle cable 110
1.6 Removing and installing fuel delivery unit 111
1.7 Checking fuel pump 112
1.8 Removing and installing fuel tank 117
1.9 Removing and installing parts of the activated charcoal filter system 119
1.10 Checking fuel tank breather 122

26 - Exhaust system 125
1 Removing and installing parts of exhaust system 125
1.1 Removing and installing parts of exhaust system 125

Protected by copyright. Copying for private or commercial purposes, in part or in whole, is not permitted unless authorised by Volkswagen AG. Volkswagen AG does not guarantee or accept any liability with respect to the correctness of information in this document. Copyright by Volkswagen AG.

satelettronica

00 - Technical data

1 - Technical data

1.1 - Technical data

1.2 - Engine number

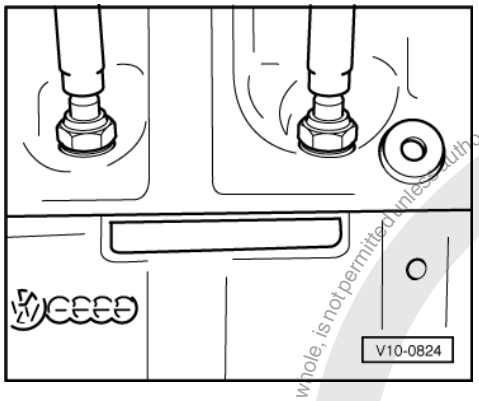

-> The engine number ("Code letters" and "Serial number") can be found on the front of the cylinder block above the crankcase breather.

Additionally there is a sticker on the toothed belt guard with "Engine code" and "Serial number".

The engine code is also included on the vehicle data plate.

1.3 - Engine data

Code letters		ADZ	AFT	1F
Manufactured		04.97 ▸	11.95 ▸	11.95 ▸ 07.97
Capacity	ltr.	1.8	1.6	1.6
Output	kW at rpm	66/5500	74/5800	55/5500
Torque	Nm at rpm	145/2500	140/3500	125/2600
Bore	ø mm	81.0	81.0	81.0
Stroke	mm	86.4	77.4	77.4
Compression ratio		10.0	10.3	9.0
RON		95 unleaded	95 unleaded	91 unleaded
Injection		Mono Motronic	Simos	Mono Motronic
Ignition		Mono Motronic	Simos	Mono Motronic
Knock control		-	x	-
Self-diagnosis		x	x	x
Lambda control		x	x	x
Catalyst		x	x	x
Exhaust gas recirculation		-	-	-

Copyright by Volkswagen AG. Volkswagen AG does not guarantee or accept any liability with respect to the correctness of information in this document. Copying for private or commercial purposes, in part or in whole, is not permitted unless authorised by Volkswagen AG.
satelettronica

Code letters	ADZ	AFT	1F
Charging	-	-	-

Protected by copyright. Copying for private or commercial purposes, in part or in whole, is not permitted unless authorised by Volkswagen AG. Volkswagen AG does not guarantee or accept any liability with respect to the correctness of information in this document. Copyright by Volkswagen AG.

satelettronica

10 - Removing and installing engine

1 - Removing and installing engine

1.1 - Removing and installing engine

Special tools, testers and auxiliary items

- Lifting tackle 2024 A
- Grease G 000 100
- Torque wrench V.A.G 1331 (5 - 50 Nm)
- Torque wrench V.A.G 1332 (40 - 200 Nm)
- Cable tie
- Engine bracket VW 540

1.2 - Notes on removing

Note:

Check whether a coded radio is installed as during the forthcoming work sequences the battery earth strap must be disconnected. Obtain radio code first if necessary.

- The engine is removed forwards together with the gearbox.
- All cable ties which are opened or cut open when removing engine, must be replaced in the same position when installing engine.

Work sequence

- With ignition switched off disconnect battery earth strap.
- Remove air cleaner housing complete.
- Drain coolant => Page 95 .
- Removing lock carrier with attachments:

=> General body repairs; Repair group 50; Body, front; Removing and installing lock carrier with attachments. Body, front Removing and installing lock carrier with attachments.

Vehicles with power assisted steering:

- Remove power assisted steering vane pump and secure to cross member with wire; hoses remain connected:

=> Running gear; Repair group 48; Assembly overview: vane pump, reservoir, hydraulic lines; Removing and installing power steering vane pump. Assembly overview: vane pump, reservoir, hydraulic lines Removing and installing power steering vane pump.

Vehicles with air conditioner:

- Observe additional information => Page 9 .

Vehicles with manual gearbox

- Disconnect clutch cable:

=> 5-Speed manual gearbox 020; Repair group 30; Servicing clutch control; removing and installing clutch cable Servicing clutch control removing and installing clutch cable

Protected by copyright. Copying for private or commercial purposes, in part, is not permitted unless authorised by Volkswagen AG. Volkswagen AG does not guarantee or accept any liability with respect to the correctness of information in this document. Copyright by Volkswagen AG.
satelettronica

- Unbolt drive shafts at gearbox flange shaft and tie up.

Vehicles with automatic gearbox

- Remove selector lever cable from gearbox:

=> Automatic gearbox 01M; Repair group 37; Servicing selector mechanism; Checking and adjusting selector lever cable Servicing selector mechanism Checking and adjusting selector lever cable

- Unbolt drive shafts at gearbox flange shaft and tie up.

Continuation for all vehicles

- Remove ribbed belt => Page 21 .
- Remove crankshaft belt pulley/vibration damper and coolant pump pulley.
- Disconnect all coolant, vacuum and breather hoses from engine.
- Disconnect all electric wires from gearbox, alternator and starter and move clear.
- Remove right-hand drive shaft and unbolt left-hand drive shaft and tie up.

Vehicles with power assisted steering:

- Tie-up power steering reservoir.

Vehicles with manual gearbox

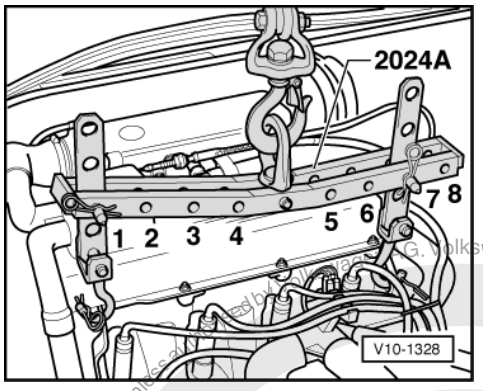

- -> Attach lifting tackle 2024 A as follows and lift slightly with workshop crane:

  Pulley end:
  2nd hole in hook at position 1
  Flywheel end:
  2nd hole in hook at position 7

Vehicles with automatic gearbox

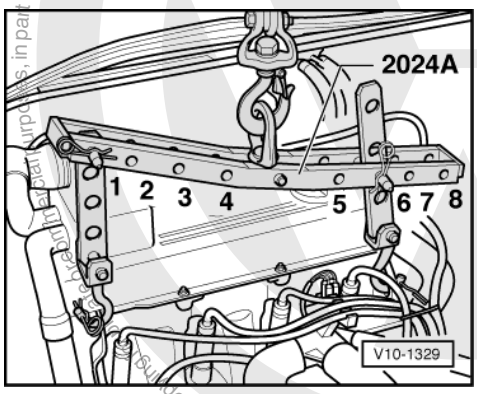

- -> Attach lifting tackle 2024A as follows and lift slightly with workshop crane:

satelettronica
Protected by copyright. Copyright by Volkswagen AG.
Volkswagen AG does not guarantee or accept any liability with respect to the correctness of information in this document.

Pulley end:
4th hole in hook at position 1
Flywheel end:
2nd hole in hook at position 6

Continuation for all vehicles

Warning! The hooks and locating pins must be secured with locking pins.

Notes:

- The positions marked 1...4 on the bar must be towards the pulley end.
- The holes in the hook rails are counted up from the hook.

Note:

When the assembly is lifted off, it must be carefully guided to prevent damage to the bodywork.

When working on the engine, it should be secured to the engine stand using the engine bracket VW 540.

1.3 - Notes on installing

Installation is carried out in the reverse sequence, when doing this note the following:

- Check clutch release bearing for wear, renew if necessary.
- Lightly grease clutch release bearing, release bearing guide sleeve and splines on input shaft with G 000 100.
- Check whether the dowel sleeves for centralising engine/gearbox are in the cylinder block, install if necessary.
- When installing the assembly, ensure that clearance exists between assembly and drive shafts.

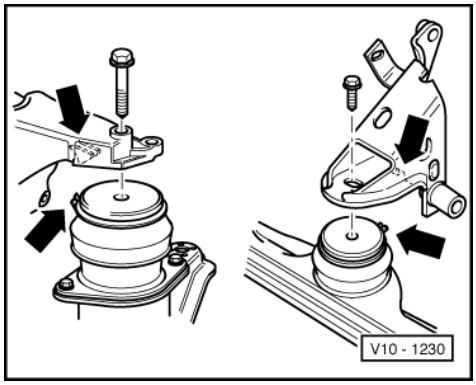

- -> When installing the engine mounting ensure that the recess on the rear console and the recess on the front console locates on the lugs of the bonded rubber mounting -arrows-.
- Align engine mountings stress-free by rocking.

Vehicles with power assisted steering:

- Install power assisted steering vane pump:

=> Running gear; Repair group 48; Assembly overview: vane pump, reservoir, hydraulic lines; Removing and installing power steering vane pump. Assembly overview: vane pump, reservoir, hydraulic lines Removing and installing power steering vane pump.

Protected by copyright. Copyright by Volkswagen AG. Volkswagen AG does not guarantee or accept any liability with respect to the correctness of information in this document. Copyright by Volkswagen AG. Protected by copyright. Copying for private or commercial purposes, in part or whole, is not permitted unless authorised by Volkswagen AG.
satelettronica

Vehicles with manual gearbox

- Installing clutch cable:

=> 5-Speed manual gearbox 020; Repair group 30; Servicing clutch control; removing and installing clutch cable Servicing clutch control removing and installing clutch cable

Vehicles with automatic gearbox

- Install gearbox selector lever cable:

=> Automatic gearbox 01M; Repair group 37; Servicing selector mechanism; Checking and adjusting selector lever cable Servicing selector mechanism Checking and adjusting selector lever cable

Continuation for all vehicles

- Installing lock carrier with attachments:

=> General body repairs; Repair group 50; Body, front; Removing and installing lock carrier with attachments. Body, front Removing and installing lock carrier with attachments.

- Installing air conditioner compressor:

=> Heating, Air conditioning; Repair group 87; removing and installing compressor bracket removing and installing compressor bracket

- Install ribbed V-belt => Page 21 .
- Electrical connections and routing:

=> Current flow diagrams, Electrical fault finding and Fitting locations

- Fill with coolant => Page 95
- Adjust throttle cable => Page 110
- Check and if necessary adjust ignition timing:

=> Repair group 28; Injection and ignition system; Checking and adjusting ignition timing. Injection and ignition system Checking and adjusting ignition timing.

- Check headlight adjustment and adjust if necessary:

=> Maintenance

- Match engine electronics control unit to immobilizer:

=> Repair group 24; Injection and ignition system; Matching engine electronics control unit to immobilizer. Injection and ignition system Matching engine electronics control unit to immobilizer.

1.4 - Tightening torques

Bolted connection		Tightening torque
Engine to gearbox	M10	60 Nm
	M12	80 Nm
Flywheel cover plate	M7	10 Nm
Drive shafts to flanged shafts		45 Nm
Exhaust pipe to manifold		40 Nm
Engine carrier to body		50 Nm

Protected by copyright. Copying for private or commercial purposes, in part or in whole, is not permitted unless authorised by Volkswagen AG. Volkswagen AG does not guarantee or accept any liability with respect to the correctness of information in this document. Copyright by Volkswagen AG.
satelettronica

1.5 - Assembly mountings

Tightening torques

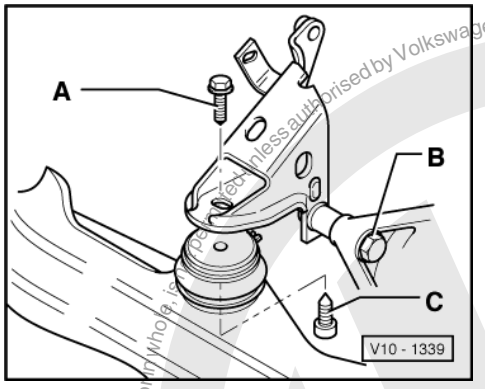

(Bolts oiled)

-> Front assembly mounting

A = 55 Nm
B = 45 Nm
C = 55 Nm

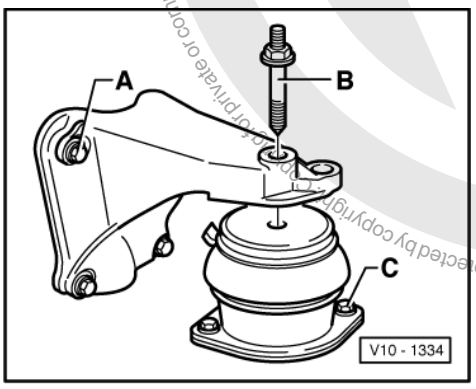

-> Rear right assembly mounting

A = 25 Nm
B = 60 Nm
C = 30 Nm

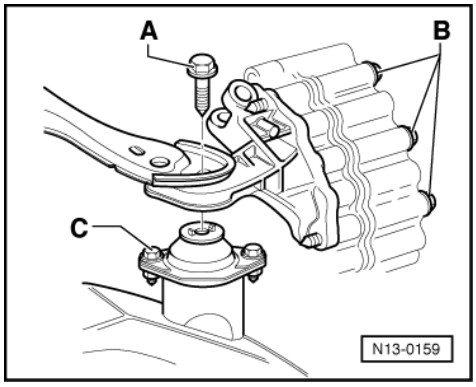

Protected by copyright. Copying for private or commercial purposes, in part or in whole, is not permitted unless authorised by Volkswagen AG. Volkswagen AG does not guarantee or accept any liability with respect to the correctness of information in this document. Copyright by Volkswagen AG.
satelettronica

-> Rear left engine mounting

A = 60 Nm
B = 35 Nm
C = 30 Nm

1.6 - Renewing engine carrier rubber mounting

Special tools, testers and auxiliary items

- Engine support bracket 10-222A with legs 10-222A/1
- Peening tool 3302
- Press tool VW 432

Work sequence

- Fit engine support bracket 10-222A with legs 10-222A/1.
- Locate support bracket in lifting eye on left of cylinder head and take-up weight of engine.

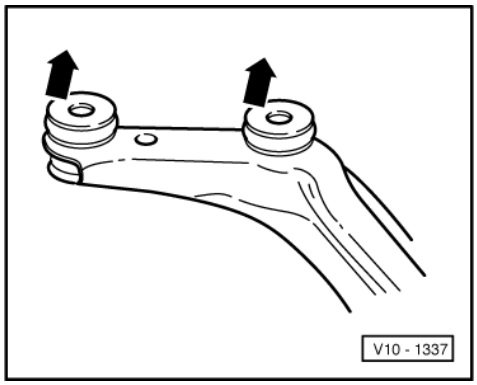

- Remove engine carrier.
- -> Lever off washers from the spacer sleeves with pliers (replace any washers which are damaged e.g. bent washers).
- Pull out spacer sleeves and detach rubber mounting.
- Fit new rubber mounting and insert spacer sleeves as far as possible.

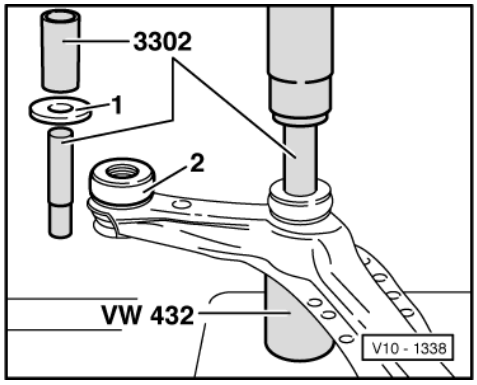

- -> Fit washers -1- over peening tool 3302 onto the rubber mounting -2-.
- Fit press sleeve of peening tool 3302 and using a press, press the washers onto the spacer sleeves and peen. Use VW 432 as packing.
- Remove any resulting protrusion/burr on the peening.

Protected by copyright. Copying for private or commercial purposes, in part or in whole, is not permitted unless authorised by Volkswagen AG. Volkswagen AG does not guarantee or accept any liability with respect to the correctness of information in this document. Copyright by Volkswagen AG.
satelettronica

1.7 - Additional information and removal instructions for vehicles with air conditioner

Warning!
The air conditioning system refrigerant circuit must not be opened.

Note:

To prevent damage to condenser and also to the refrigerant lines/hoses, ensure that the pipes and hoses are not stretched, kinked or bent.

To facilitate removing and installing the engine without opening the refrigerant circuit:

- Unbolt air conditioner fluid reservoir and allow to hang free.
- Unbolt retaining clamp(s) for refrigerant lines.
- Remove ribbed belt => Page 21 .
- Removing lock carrier with attachments:

=> General body repairs; Repair group 50; Body, front; Removing and installing lock carrier with attachments. Body, front Removing and installing lock carrier with attachments.

- Removing air conditioner compressor:

=> Heating, Air conditioning; Repair group 87; removing and installing compressor bracket removing and installing compressor bracket

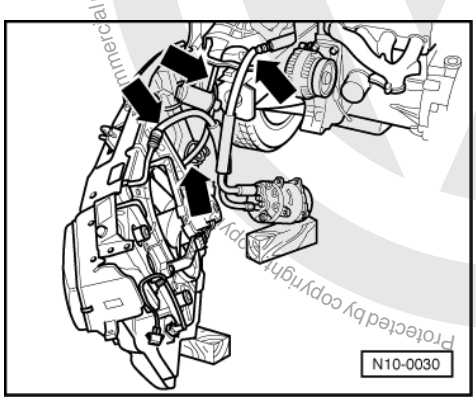

- -> Remove air conditioner compressor and lay to one side with lock carrier so that the refrigerant hoses - arrows- are not stressed.

Protected by copyright. Copyright by Volkswagen AG. Volkswagen AG does not guarantee or accept any liability with respect to the correctness of information in this document. Copyright by Volkswagen AG.
satelettronica

13 - Crankshaft group

1 - Dismantling and assembling engine

1.1 - Dismantling and assembling engine

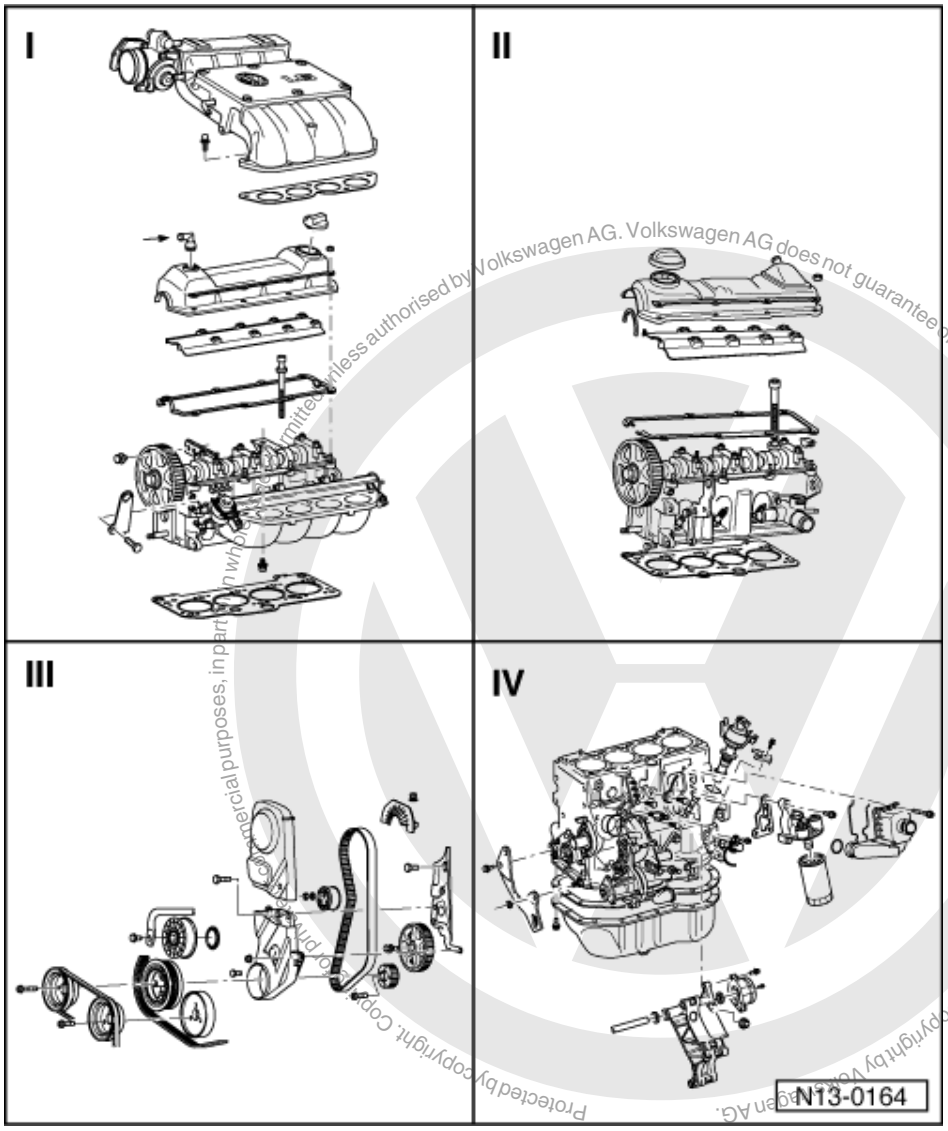

Protected by copyright. Copyright by Volkswagen AG.
Commercial purposes, in part or in whole, are not permitted unless authorised by Volkswagen AG. Volkswagen AG does not guarantee or accept any liability with respect to the correctness of information in this document.
satelettronica

Note:

If large amounts of metal shavings or quantities of small metal particles or wear are discovered during engine repair work, this can originate from damage to the crankshaft or conrod bearings. To prevent any further damage from occurring, carry out the following once the repair procedure is complete:

- Thoroughly clean oil channels
- Renew oil spray jets
- Renew oil cooler
- Renew oil filter

I Engine code AFT

=>Page 11

II Engine code 1F, ADZ

=>Page 13

III =>Page 15

IV =>Page 18

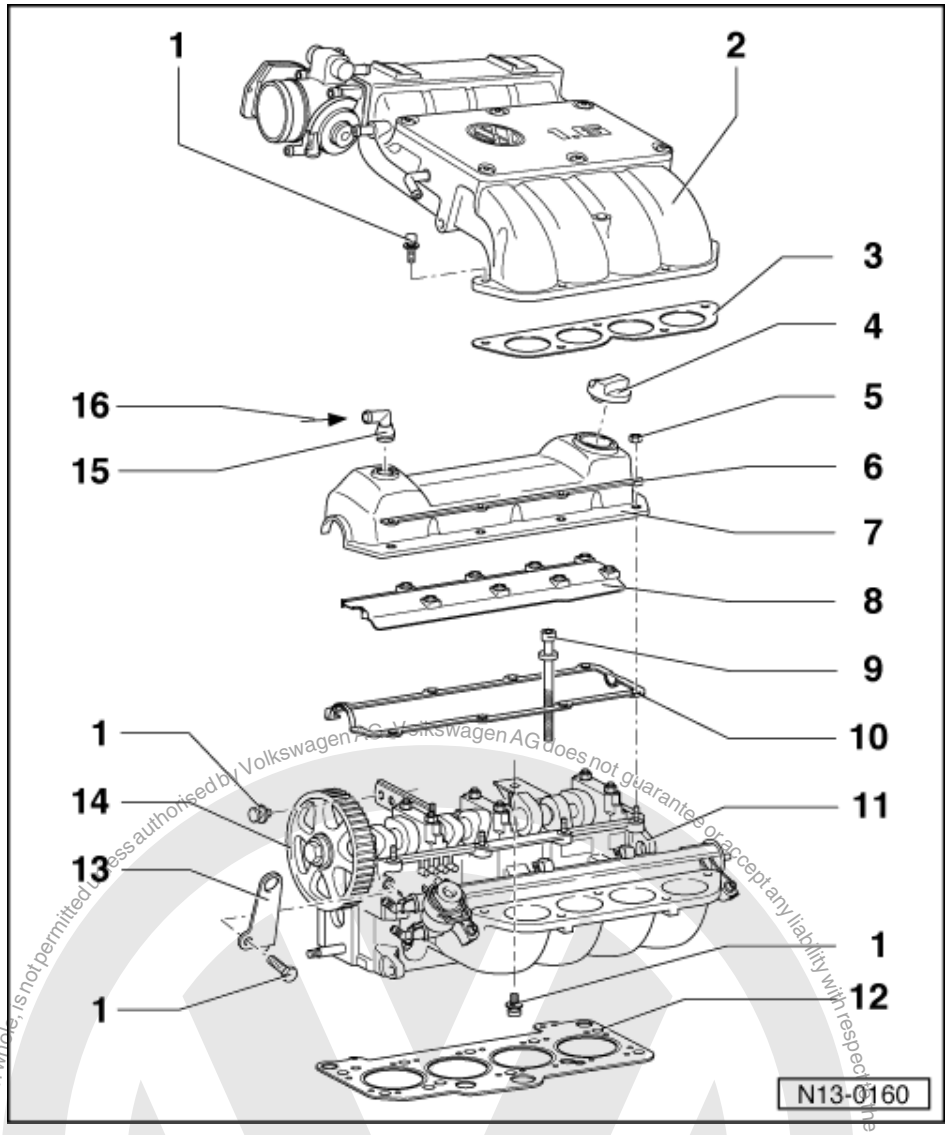

Part I Engine code AFT

1 20 Nm
2 Intake manifold - upper part
3 Gasket
- Renew

4 Cap
- Renew seal if damaged

5 10 Nm
6 Reinforcement strip

Protected by copyright. Copying for private or commercial purposes, in part or in whole, is not permitted unless authorised by Volkswagen AG. Volkswagen AG does not guarantee or accept any liability with respect to the correctness of information in this document. Copyright by Volkswagen AG.
satelettronica

7 Cylinder head cover
8 Oil deflector
9 Cylinder head bolt
- Note installation instructions and sequence when loosening and tightening => Page 53

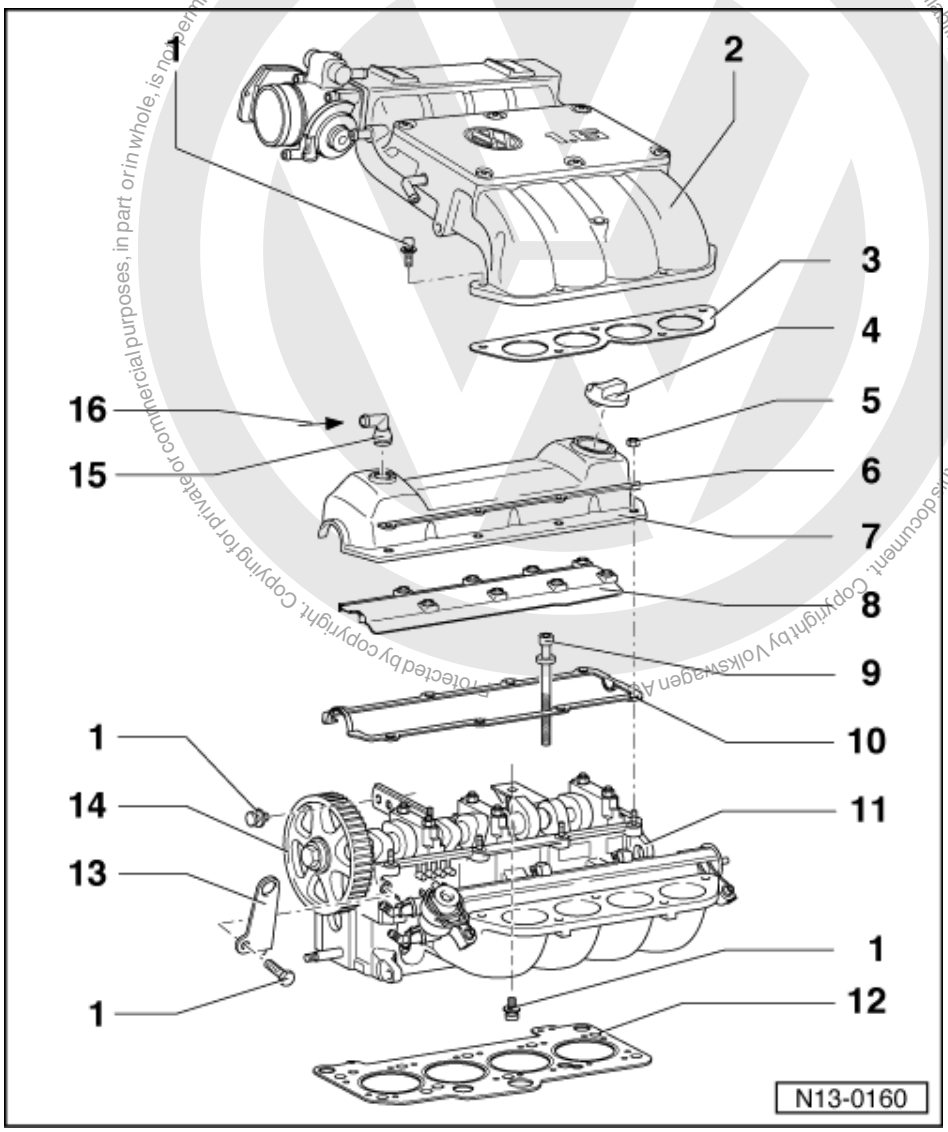

10 Cylinder head cover gasket
- Renew if damaged

11 Cylinder head
- Removing and installing => Page 53
- If replaced renew the complete coolant

12 Cylinder head gasket
- Renew
- If replaced renew the complete coolant

13 Lifting eye
14 Camshaft sprocket
- Note position when installing toothed belt => Page 24

15 Connection piece
16 From the crankcase breather

Copyright by Volkswagen AG. Volkswagen AG does not guarantee or accept any liability with respect to the correctness of information in this document. Copying for private or commercial purposes, in part or in whole, is not permitted unless authorised by Volkswagen AG. Protected by copyright.

satelettronica

- =>Page 19 , Item 13

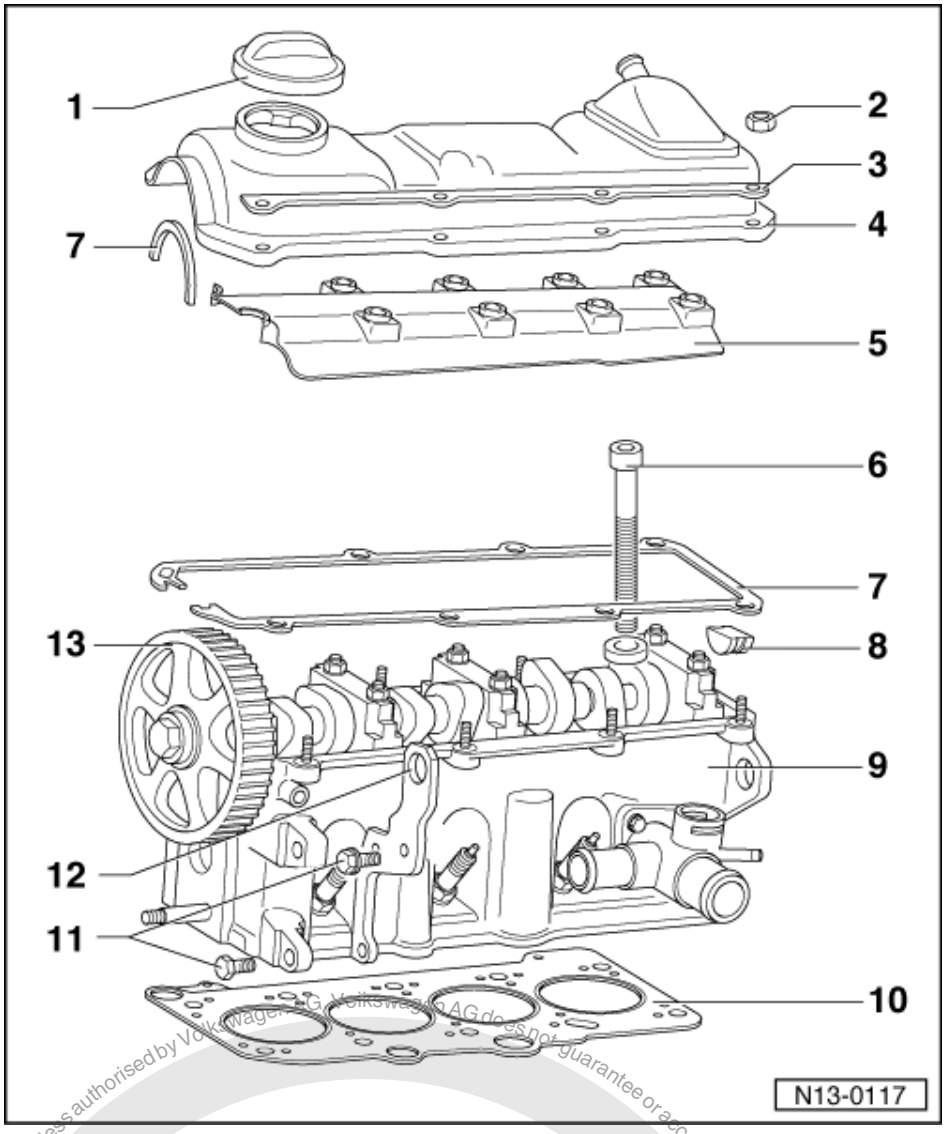

Part II Engine code 1F, ADZ

1 Cap
- Renew seal if damaged

2 10 Nm

3 Reinforcement strip

4 Cylinder head cover

5 Oil deflector

6 Cylinder head bolt
- Sequence when loosening and tightening => Page 53 , Removing and installing cylinder head

7 Cylinder head cover gasket
- Renew if damaged
- For ADZ with sealing plugs => item 8

8 Sealing plugs
- Renew

satelettronica
Protected by copyright. Copying for private or commercial purposes, in part or in whole, is not permitted unless authorised by Volkswagen AG. Volkswagen AG does not guarantee or accept any liability with respect to the correctness of information in this document. Copyright by Volkswagen AG.

Copyright by Volkswagen AG. Volkswagen AG does not guarantee or accept any liability with respect to the correctness of information in this document. Copying for private or commercial purposes, in part or in whole, is not permitted unless authorised by Volkswagen AG.

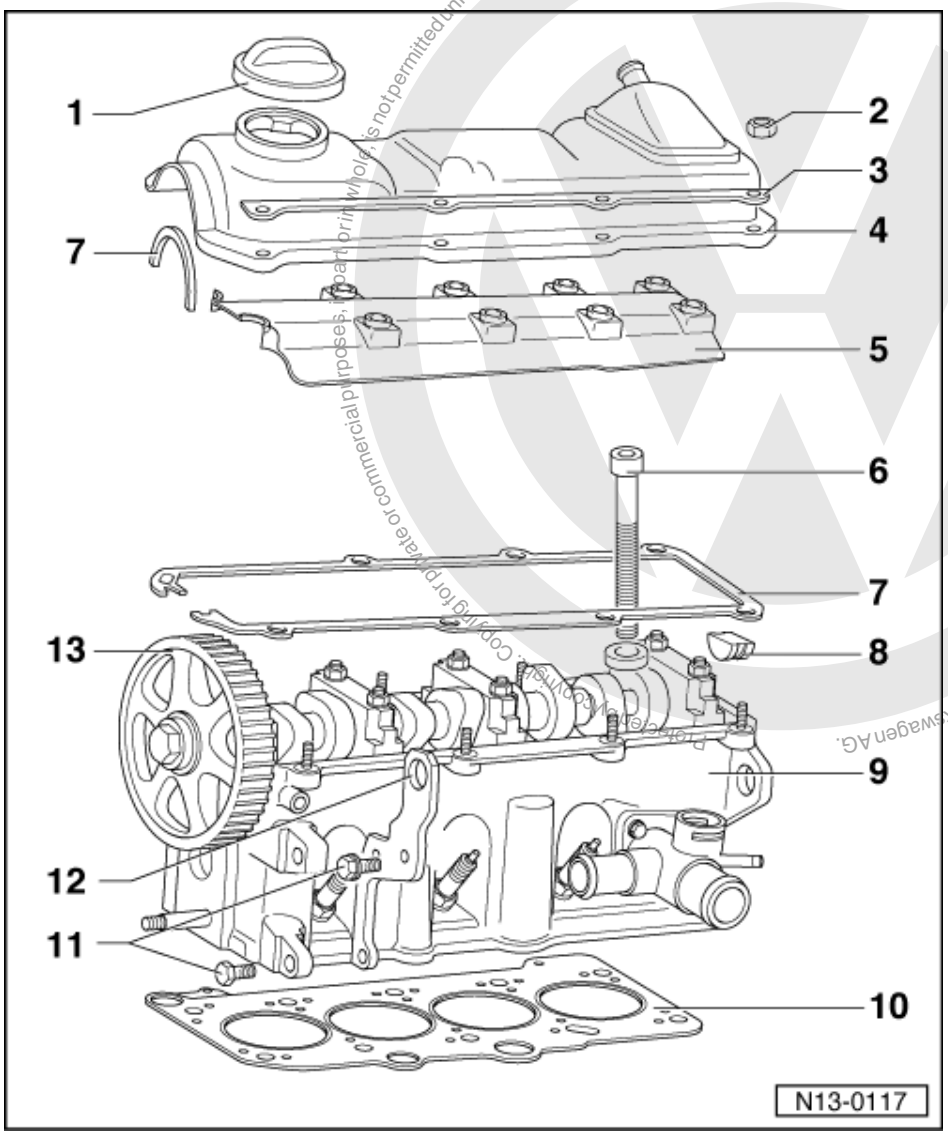

9 Cylinder head
- Removing and installing
  => Page 46
- If replaced renew the complete coolant

10 Cylinder head gasket
- Renew
- If replaced renew the complete coolant

11 20 Nm

12 Bracket

13 Camshaft sprocket
- Note position when installing toothed belt
  => Page 24 , removing, installing and tensioning toothed belt

satelettronica

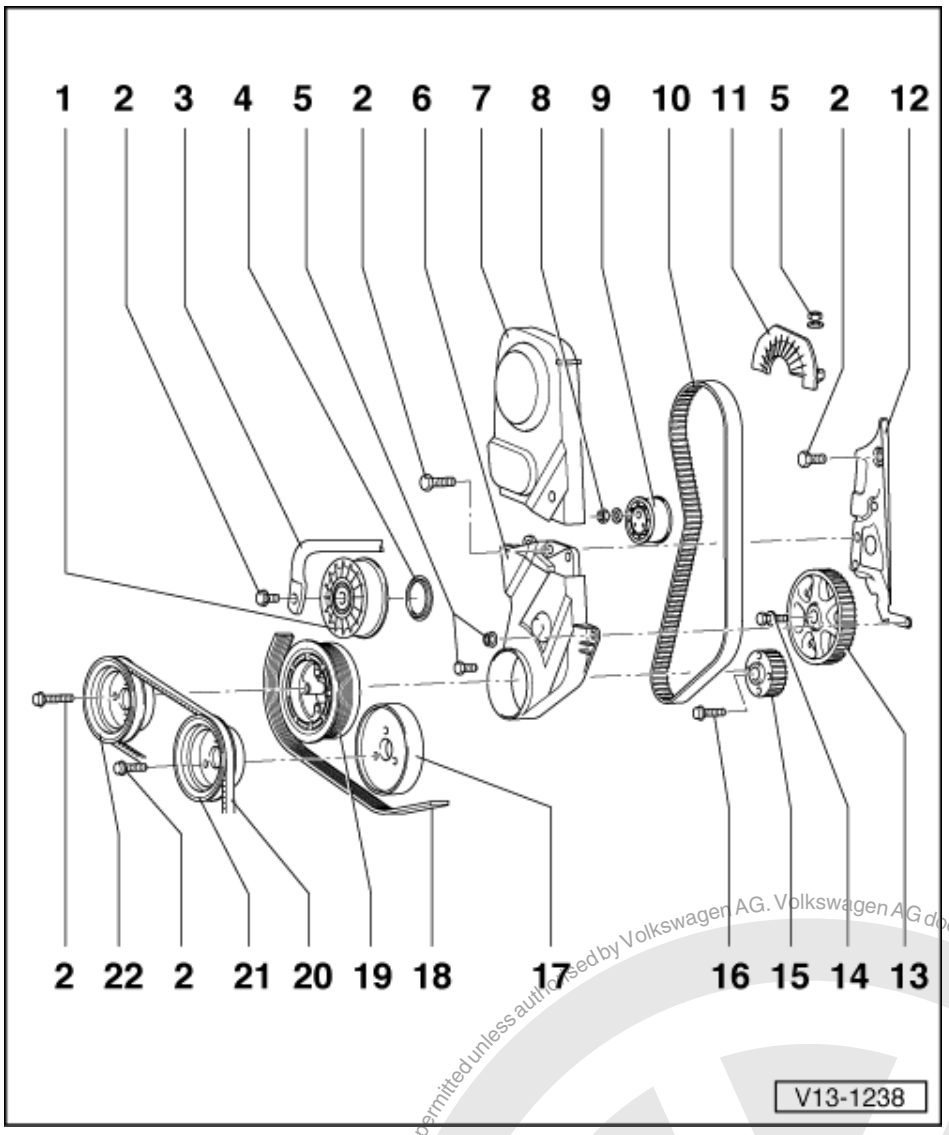

Part III

1 Tensioner
2 25 Nm
3 Tensioning lever
4 Dust cap
5 10 Nm
6 Toothed belt guard - lower part
7 Toothed belt guard - upper part
8 45 Nm
9 Tensioning roller
10 Toothed belt
- Mark D.O.R. before removing
- Check for wear
- Do not kink
- Removing, installing and tensioning => Page 24

Protected by copyright. Copying for private or commercial purposes, in part or in whole, is not permitted unless authorised by Volkswagen AG. Volkswagen AG does not guarantee or accept any liability with respect to the correctness of information in this document. Copyright by Volkswagen AG.
satelettronica

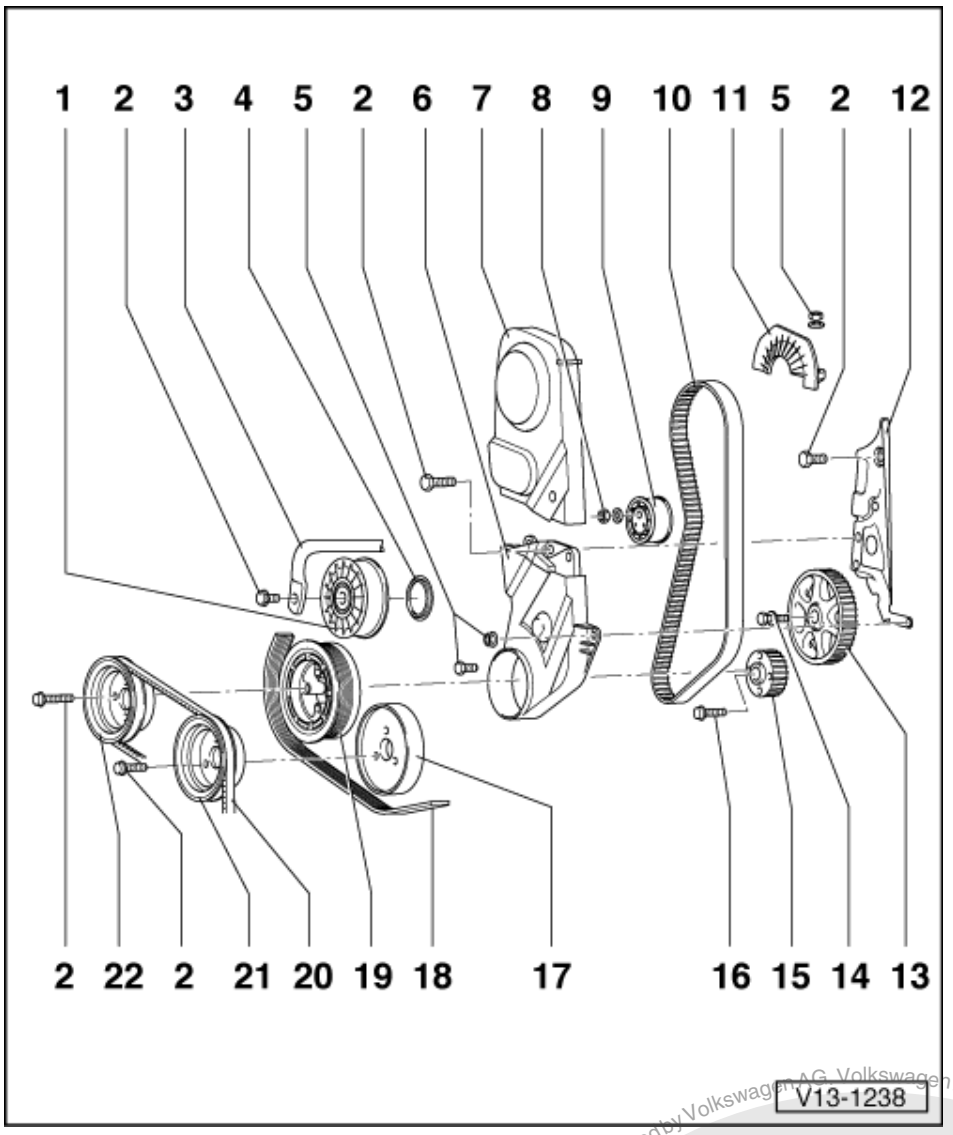

11 Toothed belt guard
12 Rear toothed belt guard
13 Intermediate shaft sprocket
14 80 Nm
- Counter-hold with 3036 to loosen and tighten

15 Crankshaft toothed belt sprocket
16 90 Nm + 1/4 turn (90 °) further
- Counter-hold with 3099 to loosen and tighten
- Renew
- Oil threads and shoulder
- The quarter turn further can be done in several stages.

17 Pulley
- For coolant pump
- Version for ribbed belt

Protected by copyright. Copying for private or commercial purposes, in part or in whole, is not permitted unless authorised by Volkswagen AG. Volkswagen AG does not guarantee or accept any liability with respect to the correctness of information in this document. Copyright by Volkswagen AG.
satelettronica

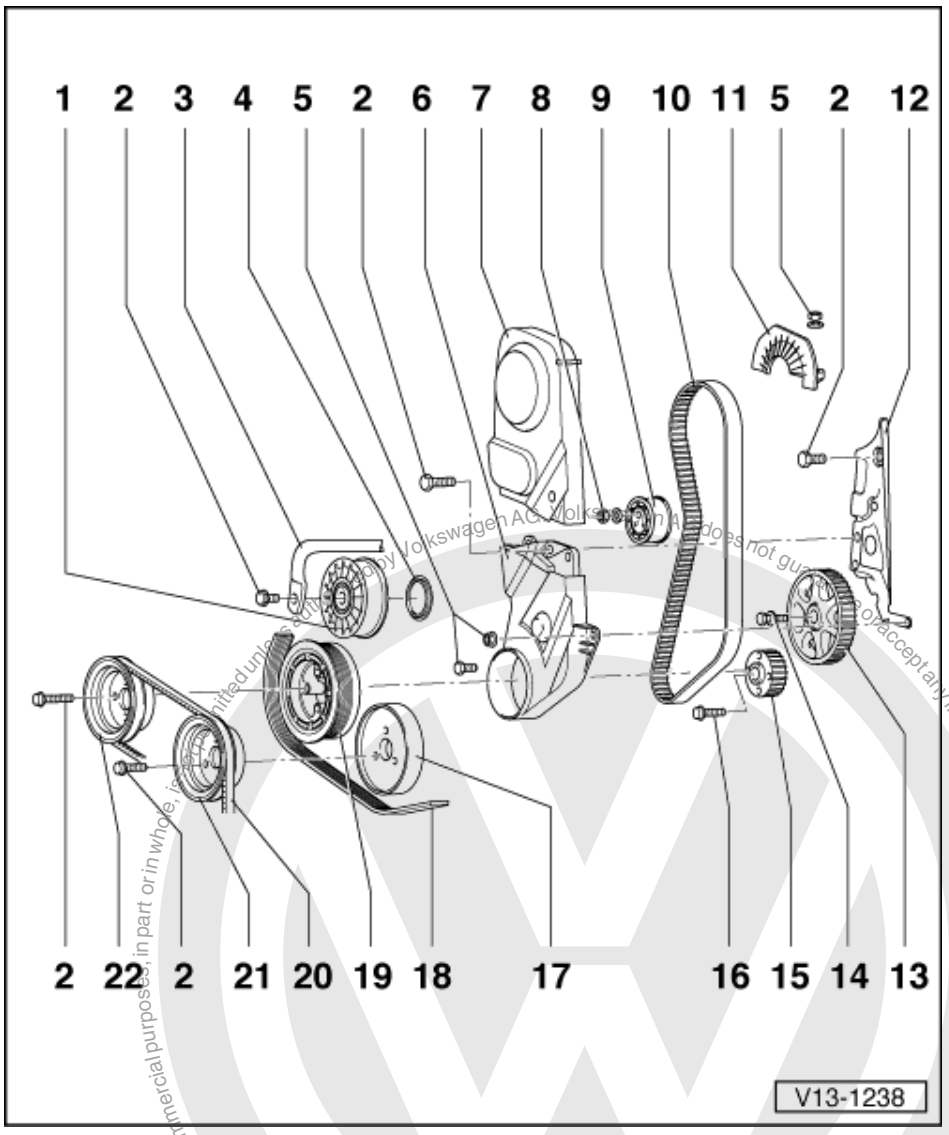

18 Ribbed belt

- Mark direction of rotation before removing
- Removing and installing
  => Page 21

19 Belt pulley/vibration damper

- Can only be installed in one position. Holes are off-set
- Note position when installing the toothed belt
  => Page 24

20 V-belt

- Adjusting V-belt tension:

=> Running gear; Repair group 48; Assembly overview: vane pump, reservoir, hydraulic pipes Assembly overview: vane pump, reservoir, hydraulic pipes

21 Pulley

- For coolant pump
- V-belt version

22 Belt pulley

satelettronica

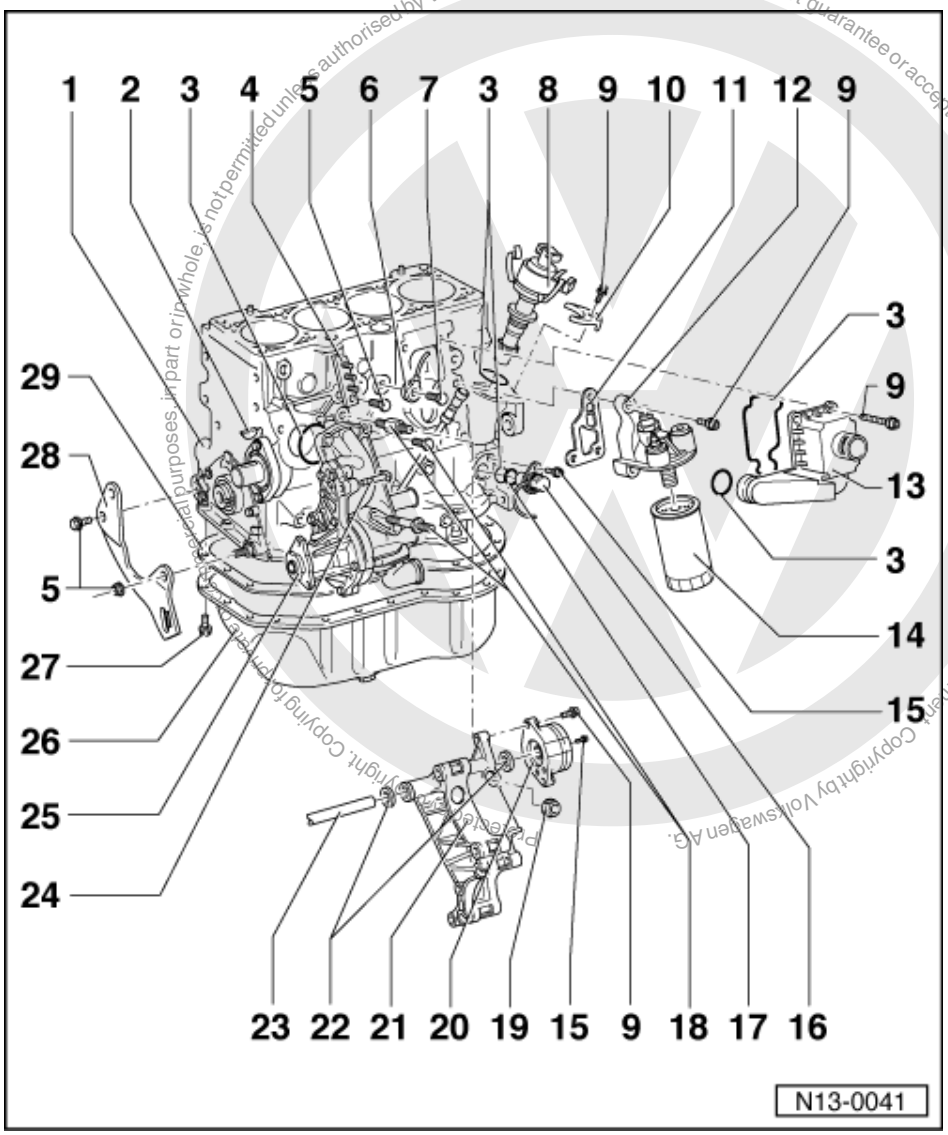

Part IV

1 Cylinder block
- Removing and installing sealing flange and pressure plate => Page 29
- Removing and installing crankshaft => Page 36
- Dismantling and assembling pistons and conrods => Page 39

2 Woodruff key
- Check for tight fit

3 O-ring
- Renew if damaged

4 Engine earth connection

5 25 Nm

6 Knock sensor
- Engine code AFT only

satelettronica

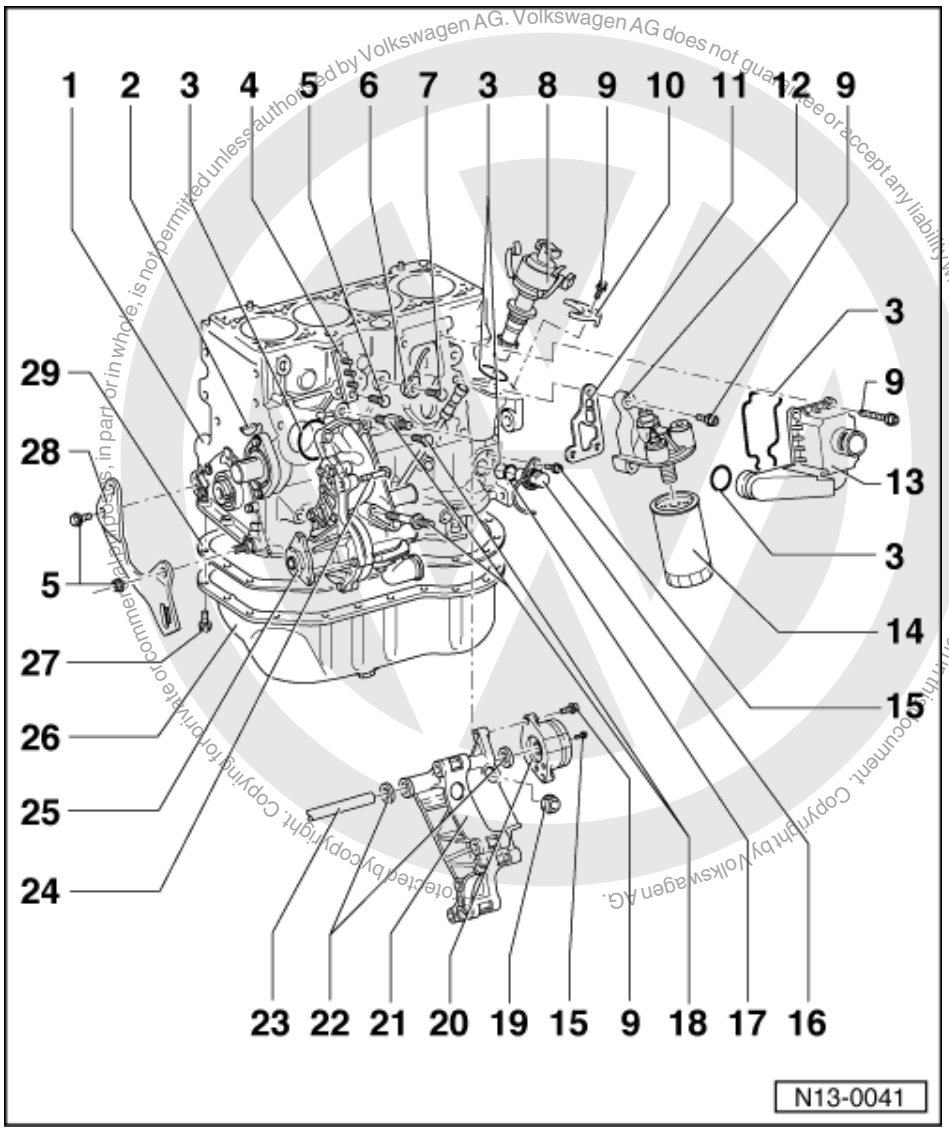

satelettronica

7 20 Nm
- Tightening torque influences the function of the knock sensor

8 Distributor
- Installing:

=> Repair group 28; Injection and ignition system; Installing distributor Injection and ignition system Installing distributor

9 25 Nm

10 Clamp

11 Gasket
- Renew

12 Oil filter bracket

13 Crankcase breather

14 Oil filter
- Loosen with strap wrench
- Tighten by hand
- Note instructions on filter when installing

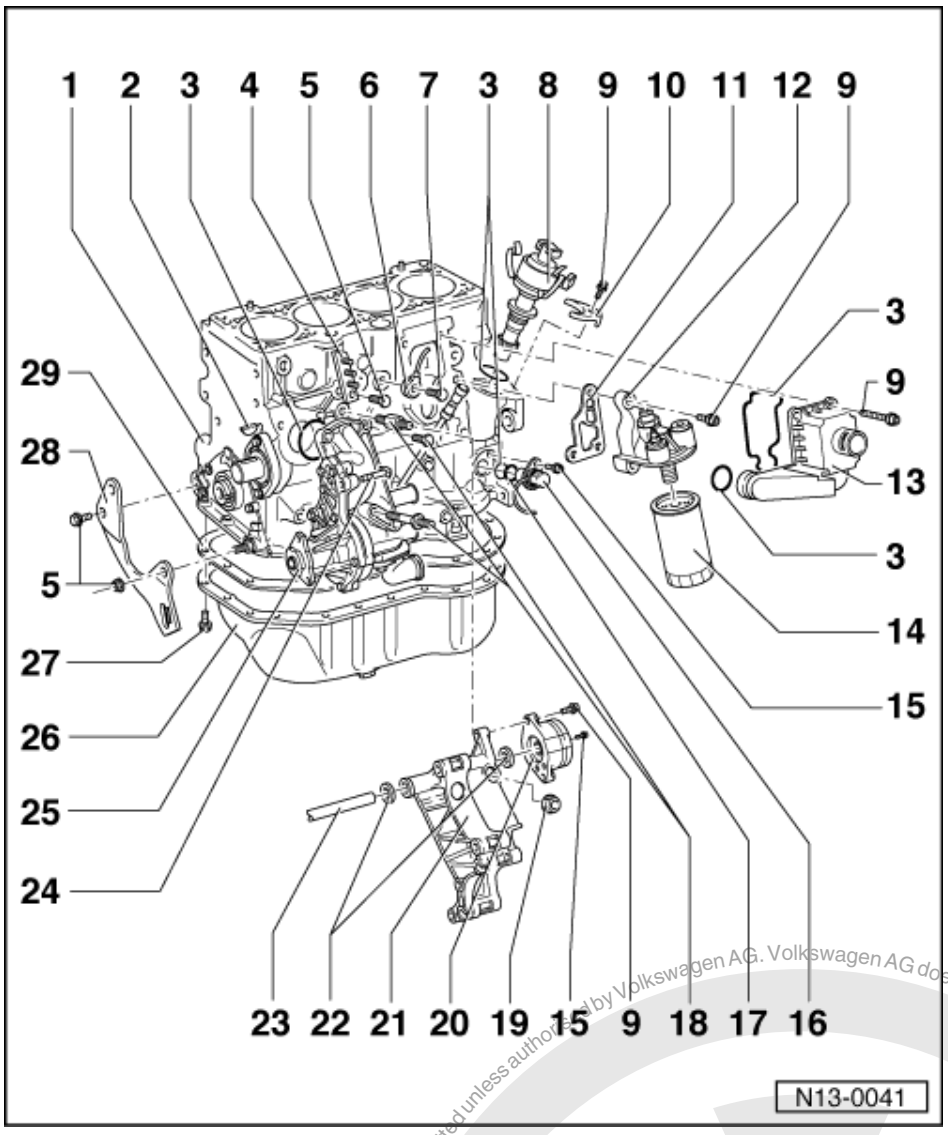

15 10 Nm
16 Engine speed sender
- Engine code AFT only

17 Support rings
18 Turn 20 Nm + 1/4 turn (90 °) further
- Renew

19 30 Nm
20 Tensioning element
21 Bracket
22 Sealing ring
- Renew if damaged

23 Tensioning lever
24 Hammer head bolt
25 Coolant pump
- Dismantling and assembling => Page 93

Protected by copyright. Copying for private or commercial purposes, in part or in whole, is not permitted unless authorised by Volkswagen AG. Volkswagen AG does not guarantee or accept any liability with respect to the correctness of information in this document. Copyright by Volkswagen AG.
satelettronica

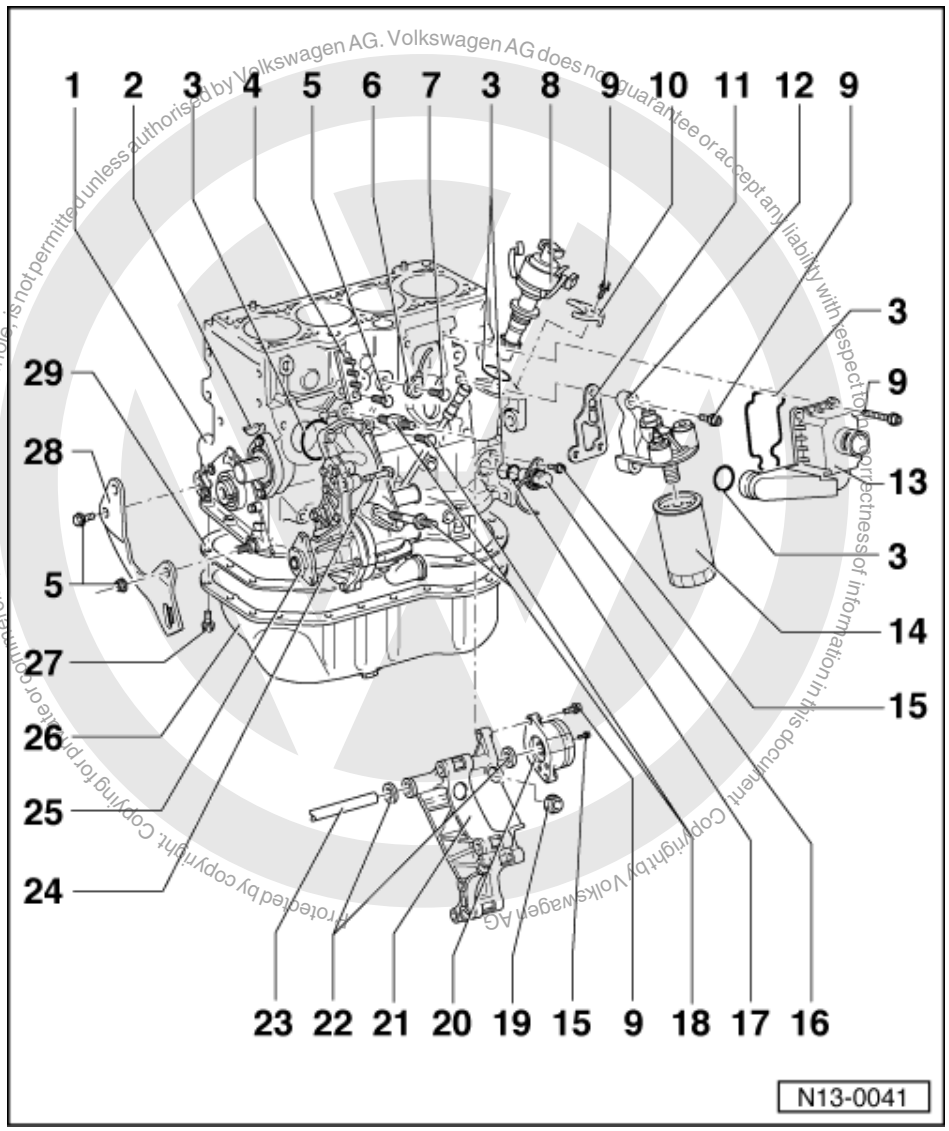

26 Sump

27 20 Nm

- Only loosen and tighten the bolts flywheel end with jointed wrench 3185

28 Bracket

- For vane pump

29 Gasket

- Renew
- Before fitting gasket coat sump flange/cylinder block flange with "D2"

1.2 - Removing and installing ribbed belt

Note:

Before removing the ribbed belt mark the direction of rotation. When installing the belt ensure it is correctly seated in the pulley.

Belt drive without tensioner

(Belt drive with tensioner =>Page 23)

satelettronica

Copyright by Volkswagen AG. Volkswagen AG does not guarantee or accept any liability with respect to the correctness of information in this document. Copyright by Volkswagen AG. Protected by copyright. Copying for private or commercial purposes, in part or in whole, is not permitted unless authorised by Volkswagen AG.

Special tools, testers and auxiliary items

- Lever 3297
- Torque wrench V.A.G 1331 (5 - 50 Nm)

Removing ribbed belt

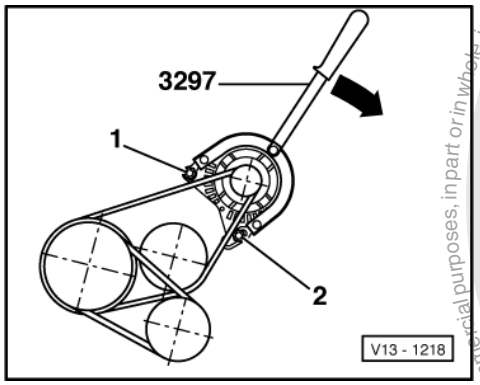

- -> Loosen alternator securing bolts -1- and -2- at least one turn.
- Press alternator down with lever 3297 and remove ribbed belts from the alternator pulley.
- Remove power assisted steering vane pump V-belt:

=> Running gear; Repair group 48; Assembly overview: vane pump, reservoir, hydraulic pipes Assembly overview: vane pump, reservoir, hydraulic pipes

- Remove ribbed belt.

Installing ribbed belt

- Place ribbed belt on crankshaft pulley/vibration damper and coolant pump pulley.
- Fit power assisted steering vane pump V-belt:

=> Running gear; Repair group 48; Assembly overview: vane pump, reservoir, hydraulic pipes Assembly overview: vane pump, reservoir, hydraulic pipes

- Push generator down onto stop at least 3 times with lever 3297, to ensure it moves freely.

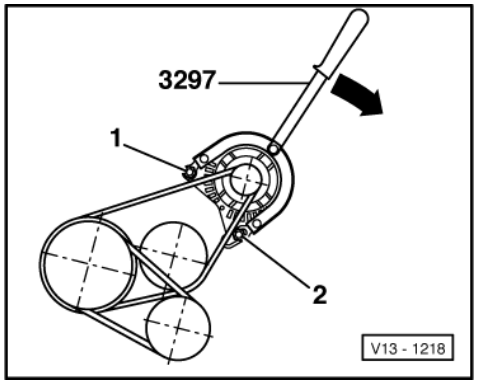

- -> Push alternator down with 3297 and fit ribbed belt.

Note:

If the engine has not yet been fitted, carry on with sequence after the engine has been installed.

- Run engine for at least 10 seconds at idling with the alternator still loose.

satelettronica

Note:

When tightening the alternator bolts observe tightening sequence, do not use alternator for support and do not touch ribbed belt.

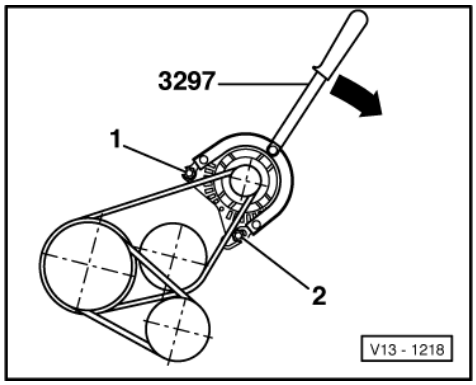

- -> Tighten securing bolt -2- to 25 Nm.
- Tighten securing bolt -1- to 25 Nm

Belt drive with tensioner

Special tools, testers and auxiliary items

- Lever 3299

Removing ribbed belt

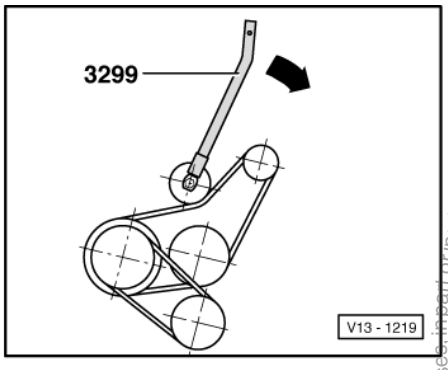

- -> Lift tensioning roller with lever 3299 and remove ribbed belt from the alternator pulley.
- Remove power assisted steering vane pump V-belt:

=> Running gear; Repair group 48; Assembly overview: vane pump, reservoir, hydraulic pipes Assembly overview: vane pump, reservoir, hydraulic pipes

- Remove ribbed belt.

Installing ribbed belt

- Place ribbed belt on crankshaft pulley/vibration damper.
- Fit power assisted steering vane pump V-belt:

=> Running gear; Repair group 48; Assembly overview: vane pump, reservoir, hydraulic pipes Assembly overview: vane pump, reservoir, hydraulic pipes

satelettronica
Copyright by Volkswagen AG. Volkswagen AG does not guarantee or accept any liability with respect to the correctness of information in this document. Copyright by Volkswagen AG. Protected by copyright. Copying for private or commercial purposes, in part or in whole, is not permitted unless authorised by Volkswagen AG.

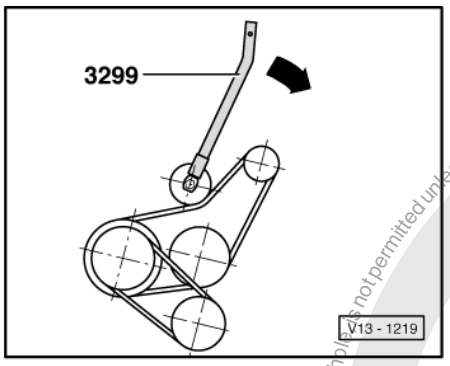

- Lift tensioning roller with 3299 and fit ribbed belt.

-> Belt drive without air conditioner compressor

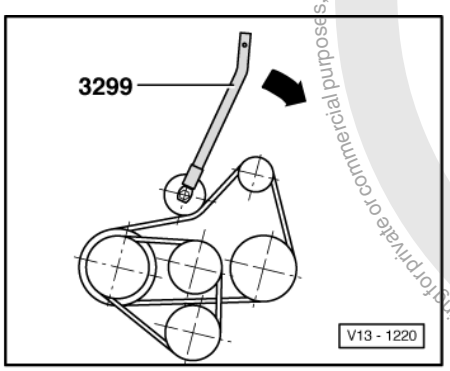

-> Belt drive with air conditioner compressor

1.3 - Removing and installing toothed belt

(Adjusting valve timing)

See notes => Page 24 .

Special tools, testers and auxiliary items

- Pin wrench Matra V159
- Torque wrench V.A.G 1331 (5 - 50 Nm)

Removing

- Remove ribbed belt => Page 21 .
- If fitted remove ribbed belt tensioning roller.
- Remove vibration damper/belt pulley, coolant pump pulley and toothed belt guard upper and lower parts.
- Mark D.O.R. of toothed belt.
- Release tensioner and take off toothed belt.

Installing

Note:

When turning the camshaft the crankshaft must not be at TDC. Danger of damage to valves/piston crown.

Protected by copyright. Copyright for private or commercial purposes, in part or in whole is not permitted unless authorised by Volkswagen AG. Volkswagen AG does not guarantee or accept any liability with respect to the correctness of information in this document. Copyright by Volkswagen AG.
satelettronica

Protected by copyright. Copying for private or commercial purposes, in part or in whole, is not permitted unless authorised by Volkswagen AG. Volkswagen AG does not guarantee or accept any liability with respect to the correctness of information in this document. Copyright by Volkswagen AG.

A - Toothed belt completely removed

If toothed belt has only been removed from camshaft => Page 27

Conditions

- The pistons must not be positioned at TDC.

Work sequence

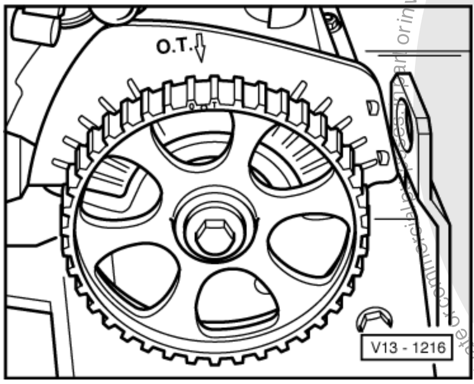

- -> Bring mark on camshaft sprocket in line with the mark on toothed belt guard.
- Place toothed belt on crankshaft sprocket and intermediate shaft sprocket (note direction of rotation).

Engine code letters AFT

Note:

The mark on the intermediate shaft sprocket is of no consequence.

- Install toothed belt guard lower part.
- Install crankshaft vibration damper and pulley (note installation position, holes off-set).
- Set crankshaft to TDC.

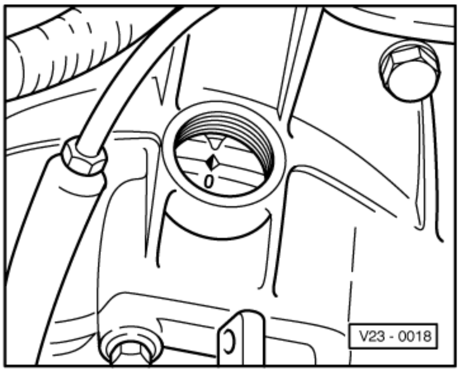

-> Engine installed:

- Set flywheel to TDC No. 1 cylinder.

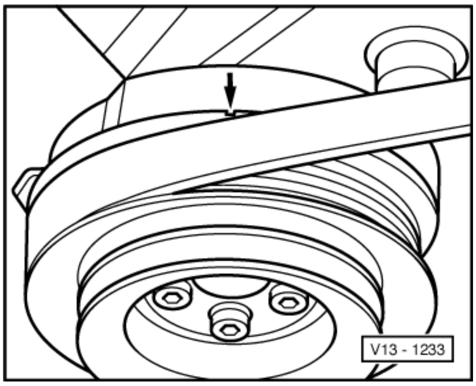

satelettronica

-> Engine removed:

- Set vibration damper to TDC No. 1 cylinder.

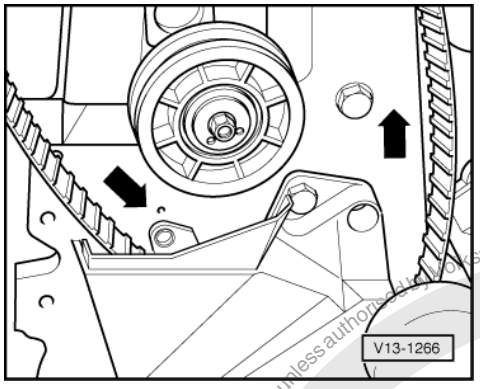

- -> Turn intermediate shaft sprocket with toothed belt so long in direction of arrow until rotor arm aligns with markings for No. 1 cylinder on distributor housing (toothed belt slides over crankshaft sprocket).
- Place toothed belt on tensioning roller and camshaft sprocket.

Note:

For easier installation of the toothed belt loosen tensioner roller lock nut only approx. one thread.

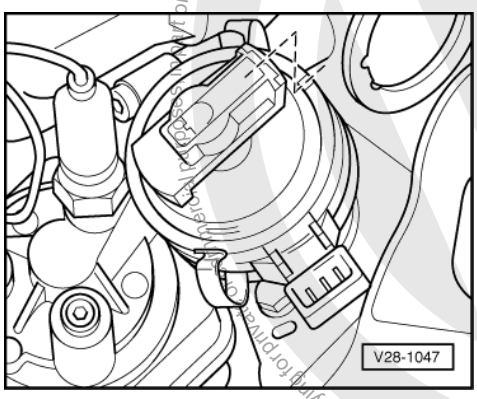

-> No. 1 cylinder marking on distributor body.

Engine code letters 1F, ADZ

- Secure vibration damper/belt pulley with one bolt (note fixing arrangement).

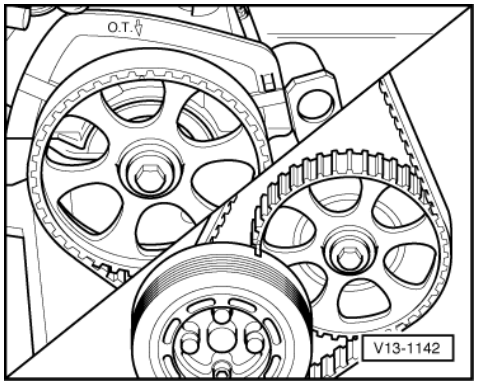

- -> Bring marking on vibration damper/on pulley in line with the mark on intermediate shaft sprocket (TDC No. 1 cylinder).
- Place toothed belt on camshaft sprocket.

Protected by copyright. Copyright by Volkswagen AG.
Copyright by Volkswagen AG. Volkswagen AG does not guarantee or accept any liability with respect to the correctness of information in this document.
satelettronica

Continued for all engine codes

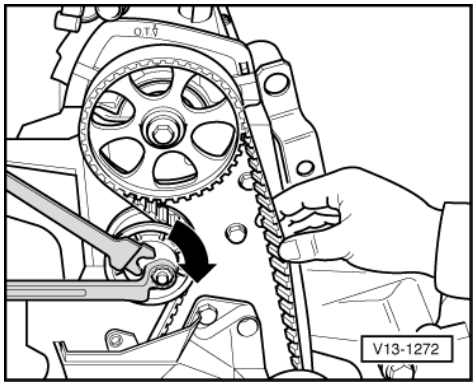

- -> Tension toothed belt, to do this turn tensioner with pin wrench (e.g. Matra V159) in direction of arrow.

It must just be possible to turn the toothed belt through 90° with the thumb and forefinger in the centre between camshaft and intermediate shaft sprockets.

- Tighten lock nut on the tensioner.
  Tightening torque: 45 Nm
- Rotate crankshaft two full turns and check adjustment.

Engine code letters AFT

- Check distributor housing and rotor arm markings.

Engine code letters 1F, ADZ

- Remove vibration damper/belt pulley.
- Install toothed belt guard lower part.
- Install coolant pump pulley, vibration damper/belt pulley and upper toothed belt guard.

Continued for all engine codes

- If fitted install ribbed belt tensioner.
  Tightening torque: 20 Nm
- Install ribbed belt => Page 21 .

Engine code letters 1F, ADZ

- Checking and if necessary adjusting ignition timing:

=> Repair group 28; Injection and ignition system; checking and adjusting ignition timing Injection and ignition system checking and adjusting ignition timing

B - Toothed belt only taken off camshaft sprocket

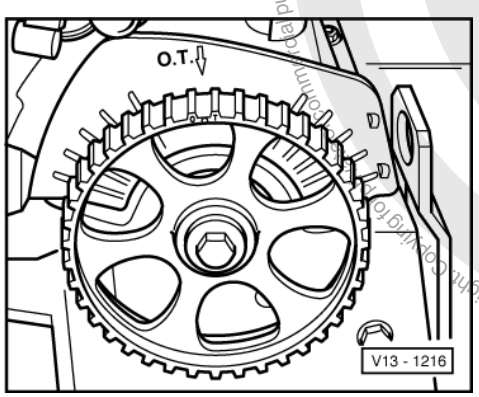

satelettronica
Protected by copyright. Copying for private or commercial purposes, in part or in whole, is not permitted unless authorised by Volkswagen AG. Volkswagen AG does not guarantee or accept any liability with respect to the correctness of information in this document. Copyright by Volkswagen AG.

Note:

When turning the camshaft the crankshaft must not be at TDC. Danger of damage to valves/piston crown.

- -> Bring mark on camshaft sprocket in line with the mark on toothed belt guard.
- Set crankshaft to TDC No. 1 cylinder.
- Place toothed belt on the camshaft sprocket and tension =>Page 26 .

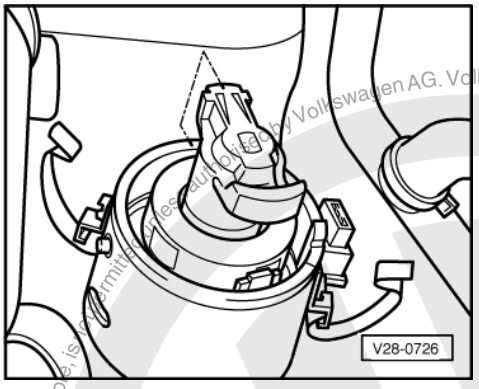

- -> Check whether rotor arm points to the No. 1 cylinder marking on distributor body. If this is not the case, turn the distributor until the marks align, if necessary refit distributor.
- Turn crankshaft two full turns and check whether camshaft and crankshaft marks align with their reference points.
- Checking and if necessary adjusting ignition timing:

=> Repair group 28; Injection and ignition system; checking and adjusting ignition timing Injection and ignition system checking and adjusting ignition timing

Protected by copyright. Copying for private or commercial purposes, in part or in whole, is not permitted unless authorised by Volkswagen AG. Volkswagen AG does not guarantee or accept any liability with respect to the correctness of information in this document. Copyright by Volkswagen AG.
satelettronica

2 - Removing and installing sealing flange and pressure plate/drive plate

2.1 - Removing and installing sealing flange and pressure plate/drive plate

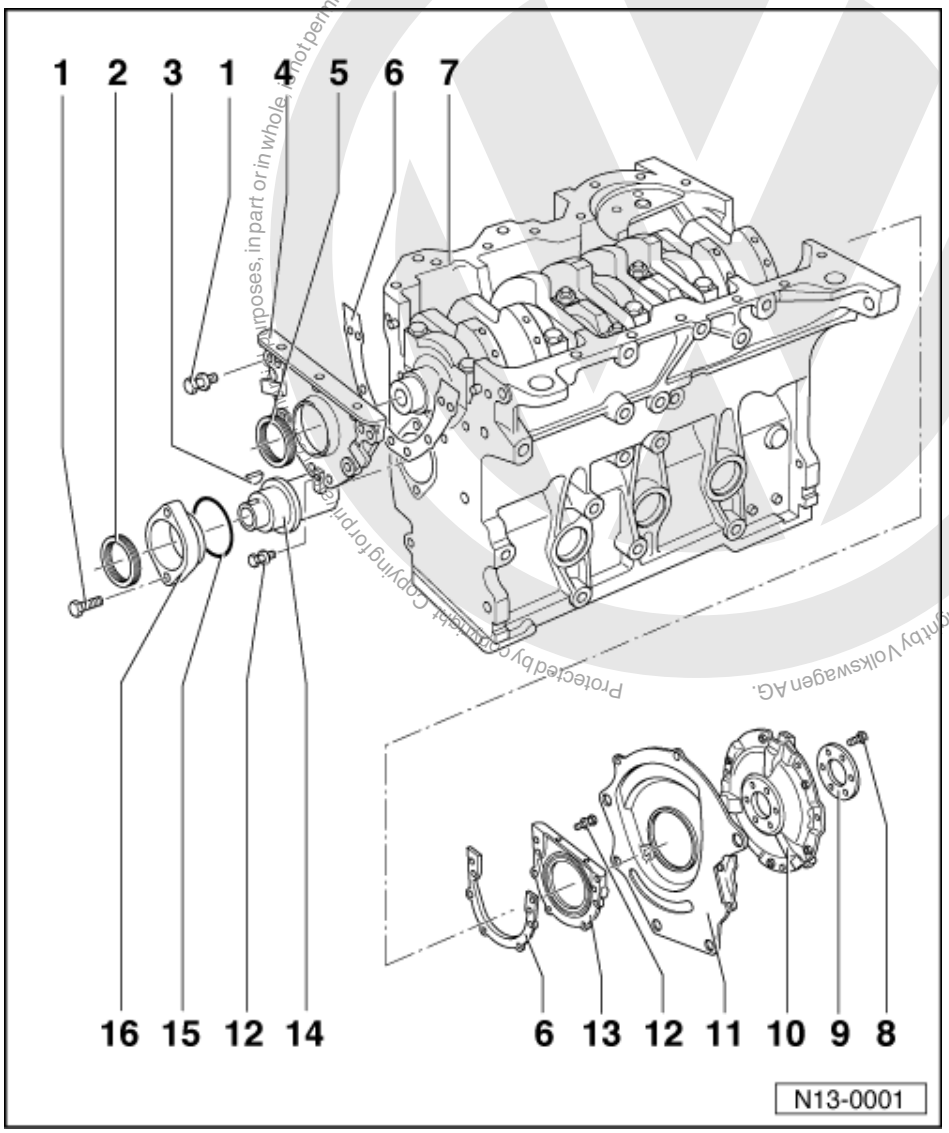

Note:

For repairs to the clutch:

=> 5 Speed manual gearbox 020; Repair group 30; servicing clutch servicing clutch

1 25 Nm
2 Seal
- Remove to remove front sealing flange
- Install with 10-203
- Lightly oil sealing lip

3 Woodruff key
- Ensure tight fit

4 Sealing flange
5 Oil seal

satelettronica

- Renewing => Page 34

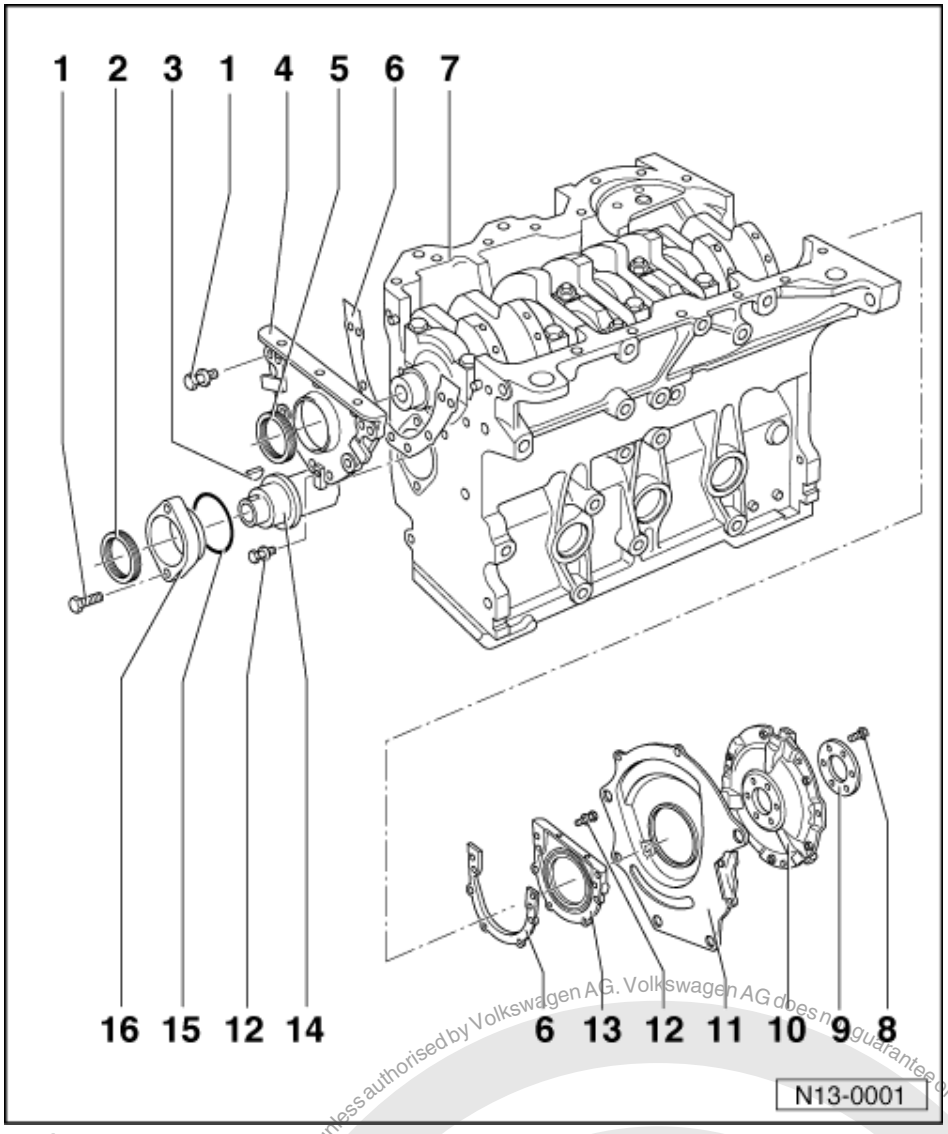

6 Gasket
- Renew

7 Cylinder block
- Removing and installing crankshaft => Page 36
- Dismantling and assembling pistons and conrods => Page 39

8 60 Nm + 1/4 turn (90 °) further
- Renew

9 Plate
- Observe fitting position

10 Pressure plate/drive plate
- Removing and installing pressure plate =>Fig. 1
- Removing and installing drive plate =>Page 32

11 Intermediate plate
- Must be located on dowel sleeves
- Do not damage/bend when assembling

Protected by copyright. Copying for private or commercial purposes, in part or whole, is not permitted unless authorised by Volkswagen AG. Volkswagen AG does not guarantee or accept any liability with respect to the correctness of information in this document. Copyright by Volkswagen AG.
satelettronica

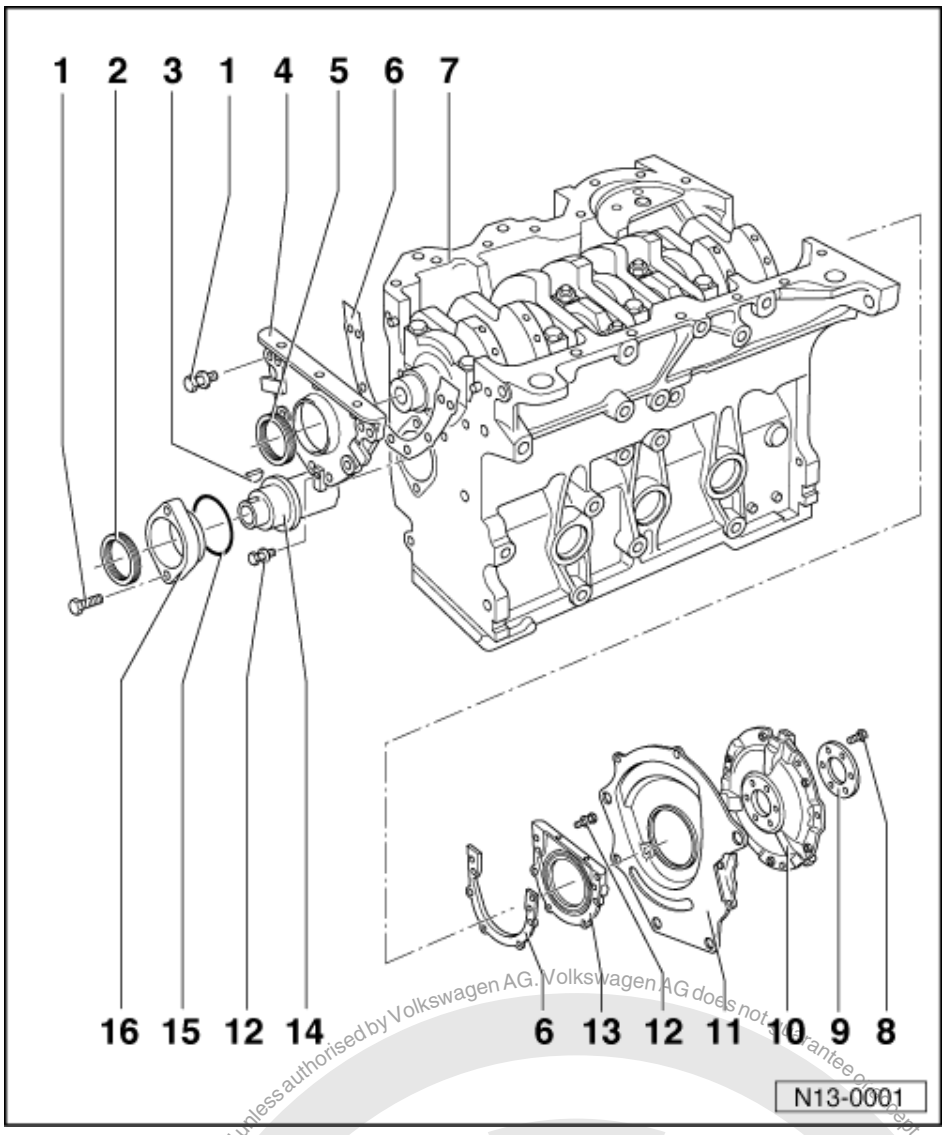

12 10 Nm

13 Sealing flange with oil seal
- Only renew complete
- Lightly oil sealing lip of oil seal

14 Intermediate shaft
- First remove distributor
- Axial clearance max. 0.25 mm

15 O-ring
- Renew if damaged

16 Front sealing flange

Protected by copyright. Copying for private or commercial purposes, in part or in whole, is not permitted unless authorised by Volkswagen AG. Volkswagen AG does not guarantee or accept any liability with respect to the correctness of information in this document. Copyright by Volkswagen AG.
satelettronica

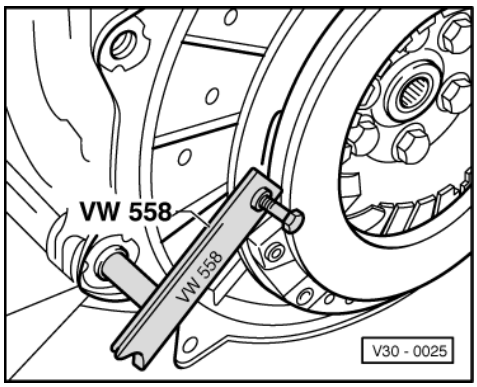

-> Fig.1 Removing and installing pressure plate

2.2 - Removing and installing drive plate

Special tools, testers and auxiliary items

- Counter-hold tool VW 558
- Hexagon bolt M8x45 and two M10 hexagon nuts
- Depth gauge

Loosening and tightening drive plate

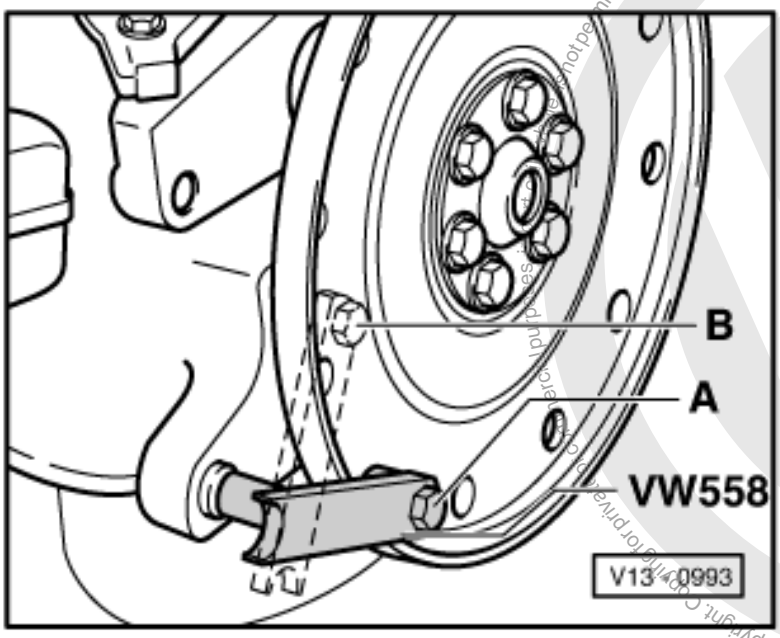

- -> Secure counter-hold tool VW 558 to the drive plate with a hexagon bolt M8x45. Place two M10 hexagon nuts between counter-hold tool and drive plate.

  Position of counter-hold tool:
  A - To loosen

Protected by copyright. Copying for private and commercial purposes, in any form and by any means, is not permitted unless authorised by Volkswagen AG. Volkswagen AG does not guarantee or accept any liability with respect to the correctness of information in this document. Copyright by Volkswagen AG.
satelettronica

B - To tighten

Installing drive plate

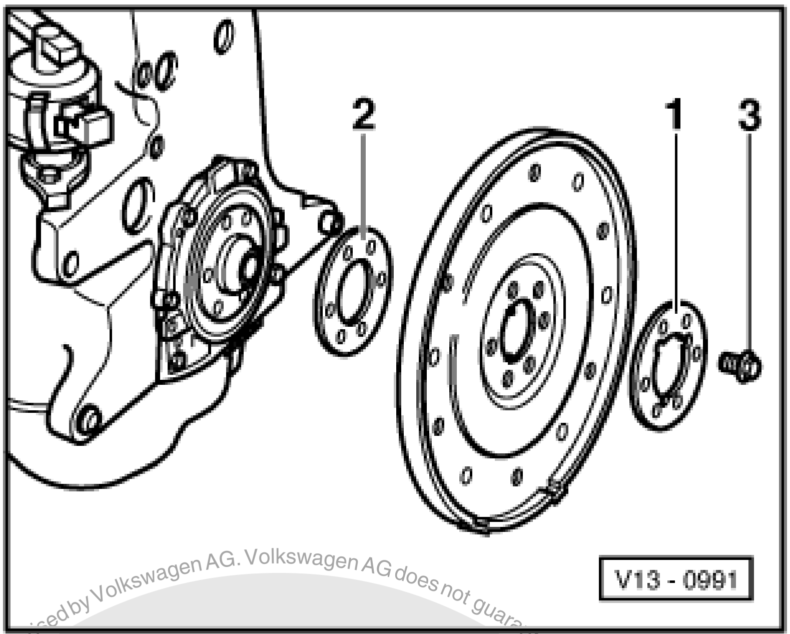

Protected by copyright. Copying for private or commercial purposes, in part or in whole, is not permitted unless authorised by Volkswagen AG. Volkswagen AG does not guarantee or accept any liability with respect to the correctness of information in this document. Copyright by Volkswagen AG.

- -> Locate drive plate and packing plate with recesses -1-.
- Fit new bolts -3- and tighten to
  30 Nm.

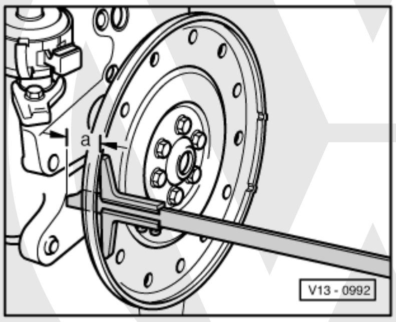

- -> Check dimension -a- at three points and calculate average.
  Specification: 19.5...21.1 mm

If the specification is not attained:

satelettronica

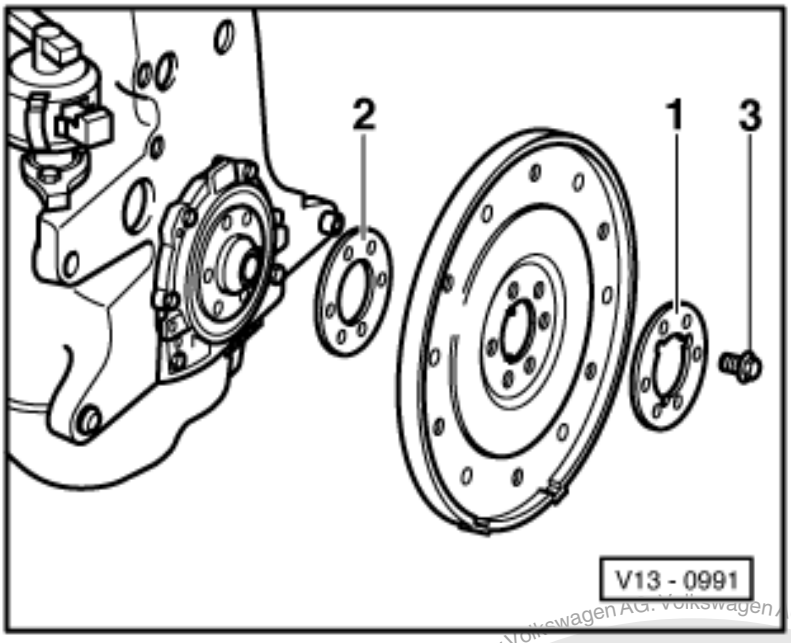

- -> Remove drive plate again and fit shim -2-. Again tighten bolts -3- to 30 Nm.
- Tighten bolts -3- to 60 Nm and turn 90° (1/4 turn) further (the additional 1/4 turn can be done in several stages).

2.3 - Renewing crankshaft oil seal - pulley end -

Special tools, testers and auxiliary items

- Counter-hold tool 3099
- Oil seal extractor 2085
- Oil seal fitting tool 3083

Removing

- Remove ribbed belt => Page 21 .
- Remove toothed belt => Page 24 .
- Remove crankshaft sprocket. To do this counter-hold sprocket with 3099.
- Unscrew inner part of the oil seal extractor 2085 two turns (approx. 3 mm) out of the outer part and lock with knurled screw.

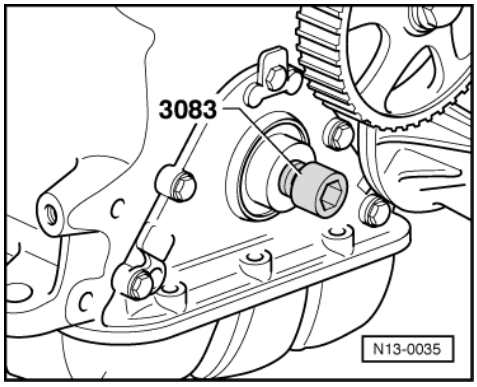

Protected by copyright. Copying for private or commercial purposes, in part or in whole, is not permitted unless authorised by Volkswagen AG. Volkswagen AG does not guarantee or accept any liability with respect to the correctness of information in this document. Copyright by Volkswagen AG.
satelettronica

- -> To guide the oil seal extractor, screw bolt from 3083 into crankshaft as far as it will go.

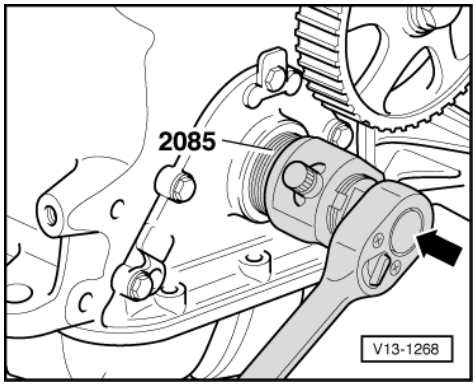

- -> Lubricate threaded head of oil seal extractor, place it in position and exerting firm pressure screw it as far as possible into oil seal.
- Loosen knurled screw and turn inner part against crankshaft until the oil seal is pulled out.

Installing

- Lightly oil sealing lip of oil seal.

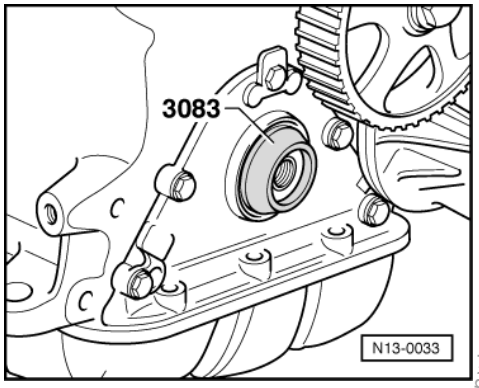

- -> Place guide sleeve from 3083 onto crankshaft journal.

- Slide oil seal over guide sleeve.

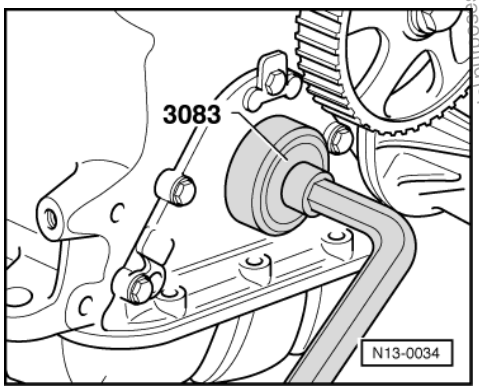

- -> Press oil seal in onto stop with press sleeve from 3083.
- Install and tension toothed belt => Page 24

Protected by copyright. Copying for private or commercial purposes, in part or in whole, is not permitted unless authorised by Volkswagen AG. Volkswagen AG does not guarantee or accept any liability with respect to the correctness of information in this document. Copyright by Volkswagen AG.
satelettronica

3 - Removing and installing crankshaft

3.1 - Removing and installing crankshaft

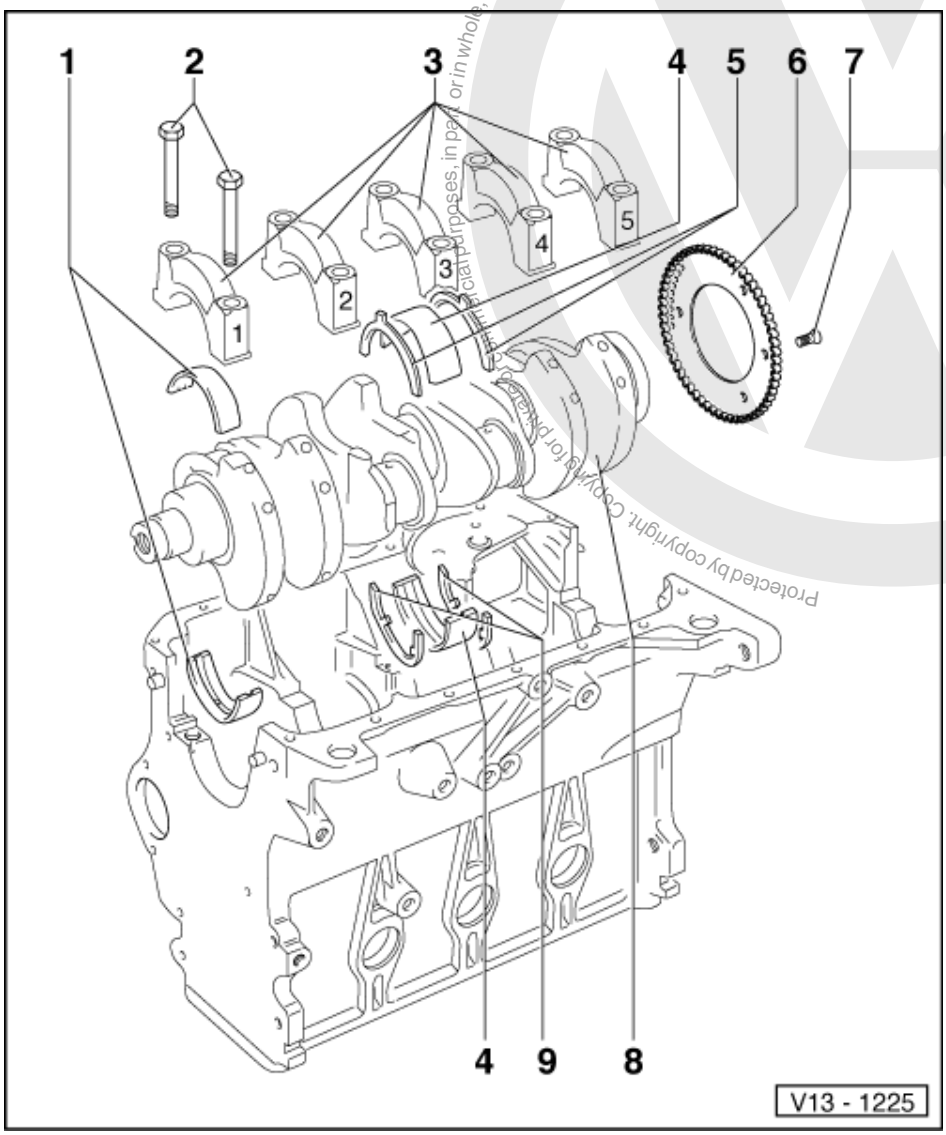

1 Bearing shells 1, 2, 4 and 5
- For bearing caps 1, 2 and 5 without oil groove
- For bearing cap 4 and cylinder block with oil groove
- Do not interchange used bearing shells (mark)

2 65 Nm + 1/4turn (90 °) further

3 Bearing cap
- Bearing cap 1: Pulley end
- Bearing cap 3 with recesses for thrust washers
- Bearing shell retaining lugs (cylinder block/bearing cap) must be on the same side

Protected by copyright. Copying for private or commercial purposes, in part or in whole, is not permitted unless authorised by Volkswagen AG. Volkswagen AG does not guarantee or accept any liability with respect to the correctness of information in this document. Copyright by Volkswagen AG.
satelettronica

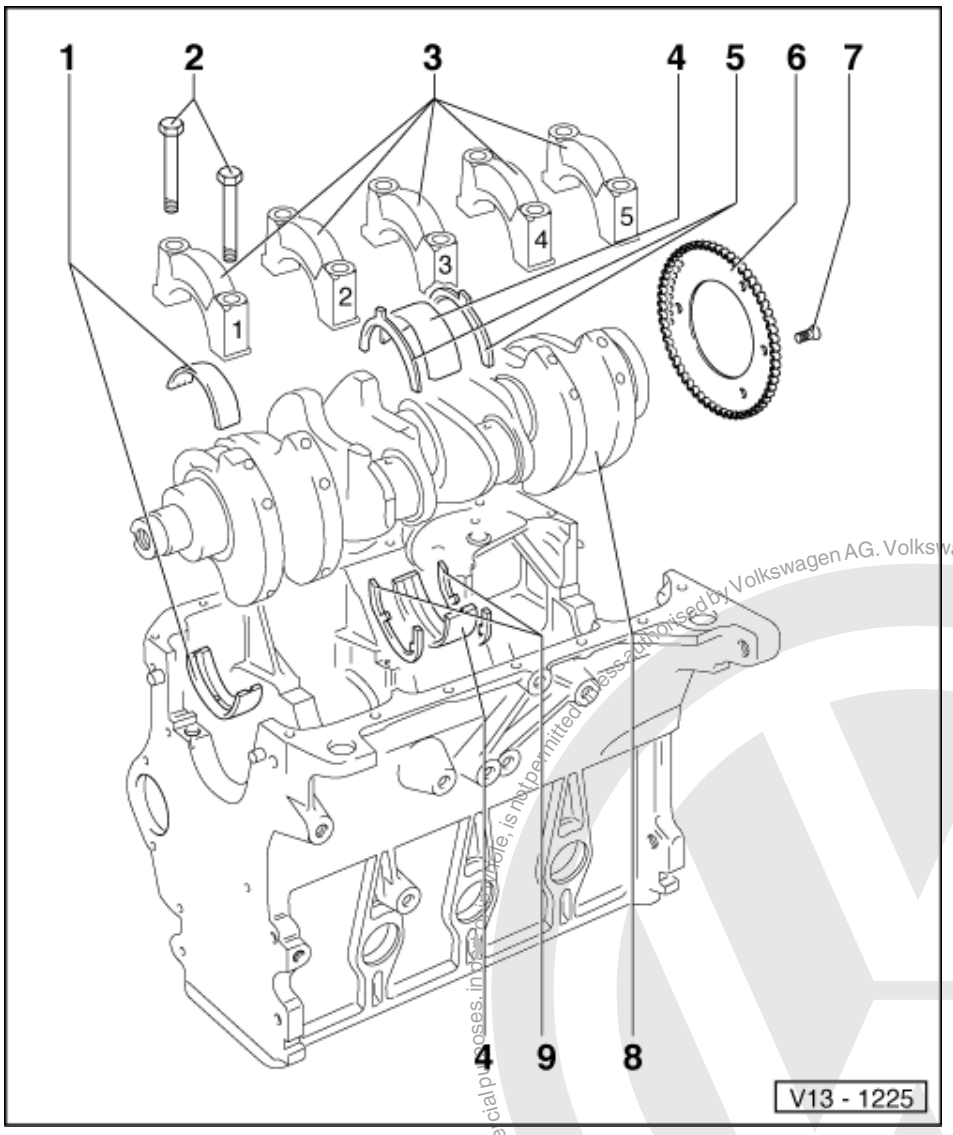

4 Bearing shell 3
- For bearing cap without oil groove
- For cylinder block with oil groove

5 Thrust washer
- For bearing cap 3
- Note fixing arrangement

6 Sender wheel
- Engine code AFT only
- For speed sender
- Renew

7 10 Nm + 1/4 turn (90 °) further
- Engine code AFT only
- Renew

Protected by copyright. Copying for private or commercial purposes, in part or in whole, is not permitted unless authorised by Volkswagen AG. Volkswagen AG does not guarantee or accept any liability with respect to the correctness of information in this document. Copyright by Volkswagen AG.
satelitronica

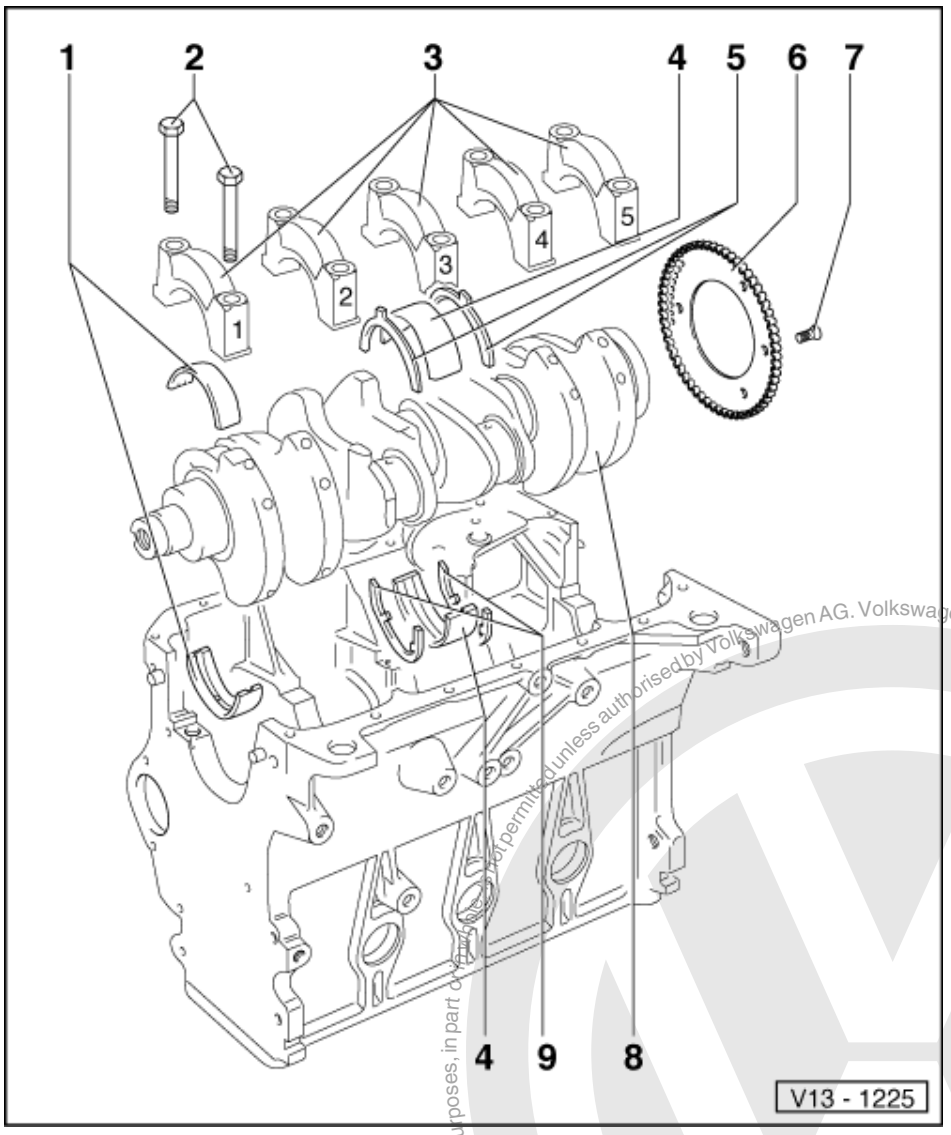

8 Crankshaft

- Axial clearance new: 0.07...0.17 mm
  Wear limit: 0.25 mm
- Check radial clearance with Plastigage
  New: 0.02...0.06 mm
  Wear limit: 0.17 mm
- Do not rotate the crankshaft when checking the radial clearance
- Crankshaft dimensions
  => Page 38

9 Thrust washer

- For cylinder block, bearing 3

Protected by copyright. Copying for private or commercial purposes, in part or in whole, is not permitted unless authorised by Volkswagen AG. Volkswagen AG does not guarantee or accept any liability with respect to the correctness of information in this document. Copyright by Volkswagen AG.
satelettronica

3.2 - Crankshaft dimensions

(in mm)

Honing dimension	Main journal -ø	Conrod journal-ø
Basic dimension	-0.022 54.00 -0.042	-0.022 47.80 -0.042

Honing dimension	Main journal -ø	Conrod journal-ø
1st undersize	-0.022 53.75 -0.042	-0.022 47.55 -0.042
2nd undersize	-0.022 53.50 -0.042	-0.022 47.30 -0.042
3rd undersize	-0.022 53.25 -0.042	-0.022 47.05 -0.042

4 - Dismantling and assembling pistons and conrods

4.1 - Dismantling and assembling pistons and conrods

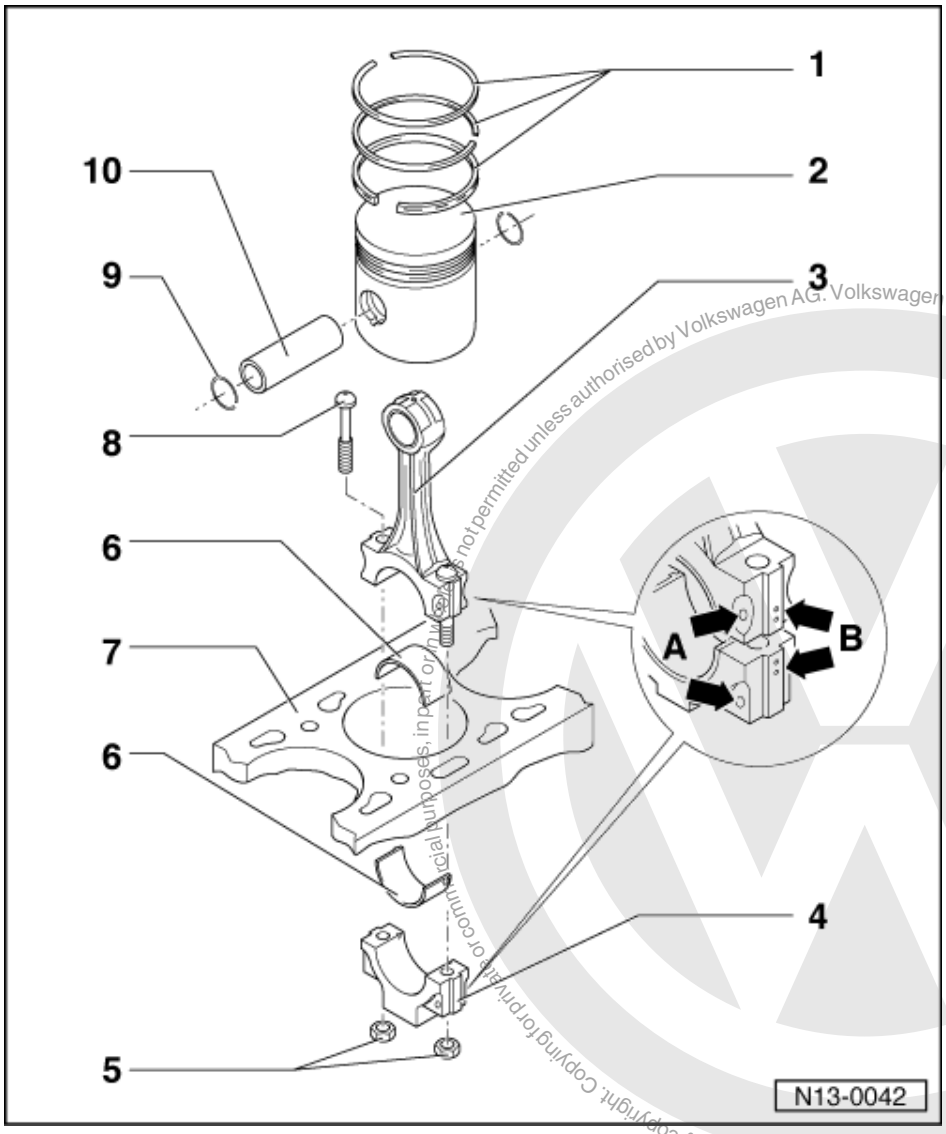

1 Piston ring

- Offset gaps by 120 °
- Remove and install with piston ring pliers
- "TOP" faces towards piston crown
- Checking ring gap=> Fig. 1
- Checking ring to groove clearance

satelettronica
Protected by copyright. Copying for private or commercial purposes, in part or in whole, is not permitted unless authorised by Volkswagen AG. Volkswagen AG does not guarantee or accept any liability with respect to the correctness of information in this document. Copyright by Volkswagen AG.

=> Fig. 2
- 2 or 3 part oil scraper ring, mixed installations permissible

2 Piston
- Checking => Fig. 3
- Mark installation position and cylinder number
- Arrow on piston crown points to pulley end
- Install using piston ring clamp
- Characteristics=> Fig. 4

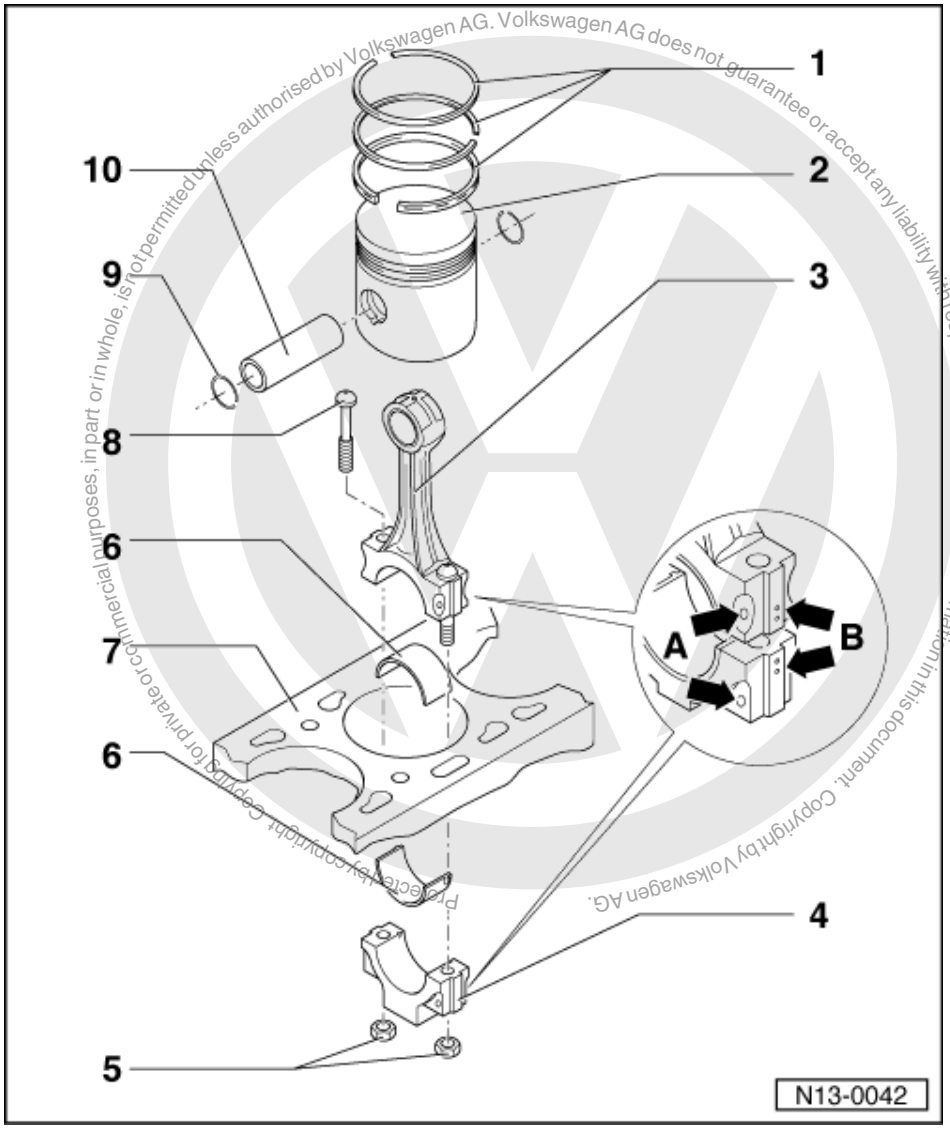

Protected by copyright. Copyright for private or commercial purposes, in part or in whole, is not permitted unless authorised by Volkswagen AG. Volkswagen AG does not guarantee or accept any liability with respect to the correctness of information in this document. Copyright by Volkswagen AG.

3 Conrod
- Only renew as a set
- Mark cylinder number -B-
- Installation position:
  Marking -A- faces towards pulley end

4 Conrod bearing cap
- Note installation position

5 30 Nm + 1/4 turn (90 °) further
- Oil threads and contact surface
- To measure radial clearance tighten to 30 Nm but not further

satelettronica

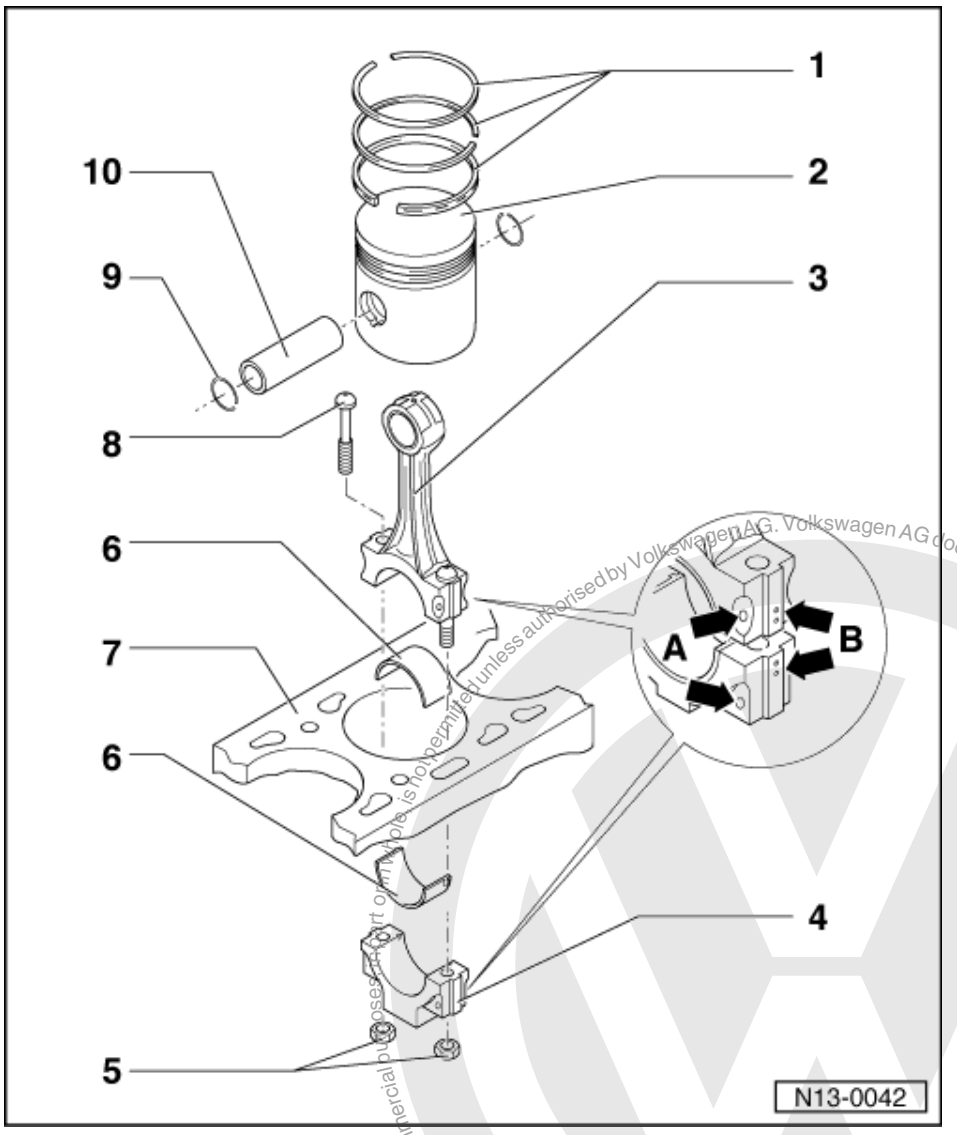

6 Bearing shell
- Note installation position
- Do not interchange used bearing shells
- Ensure retaining lugs fit tightly in recesses
- Axial clearance
  New: 0.05...0.31 mm
  Wear limit: 0.37 mm
- Check radial clearance with Plastigage:
  New: 0.01...0.06 mm
  Wear limit: 0.12 mm
  Do not rotate crankshaft when checking radial clearance

7 Cylinder block
- Checking cylinder bores
  =>Fig. 5
- Piston and cylinder dimensions
  =>Page 45

8 Conrod bolt

Protected by copyright. Copying for private or commercial purposes, in part or in whole, is not permitted unless authorised by Volkswagen AG. Volkswagen AG does not guarantee or accept any liability with respect to the correctness of information in this document. Copyright by Volkswagen AG.
satelettronica

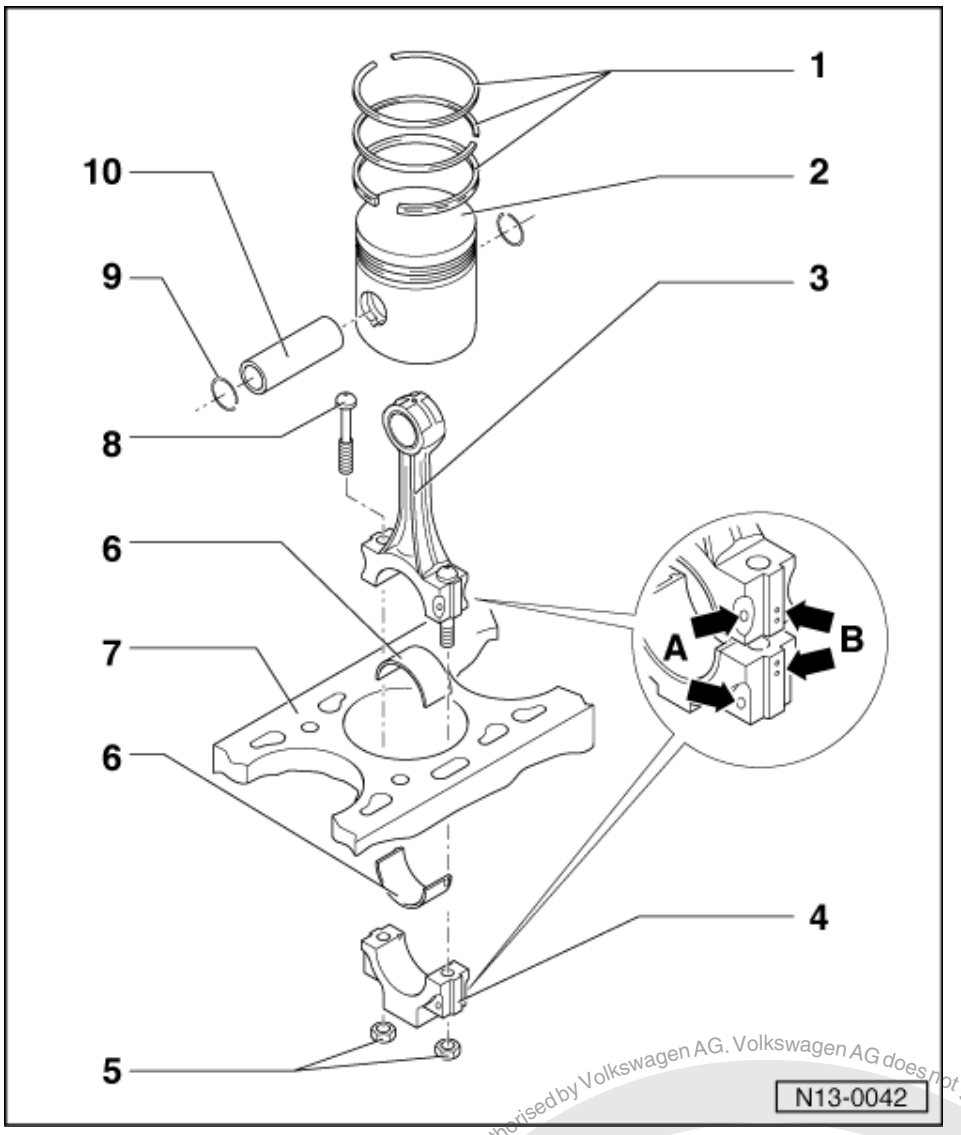

9 Circlip
10 Piston pin
- If difficult to remove, heat piston to 60 °C
- Remove and install with VW 222a

Special tools, testers and auxiliary items

- Feeler gauges
- Internal dial gauge 50...100 mm
- Micrometer 75...100 mm

satelettronica
Protected by copyright. Copying for private or commercial purposes, in part or in whole, is not permitted unless authorised by Volkswagen AG. Volkswagen AG does not guarantee or accept any liability with respect to the correctness of information in this document. Copyright by Volkswagen AG.

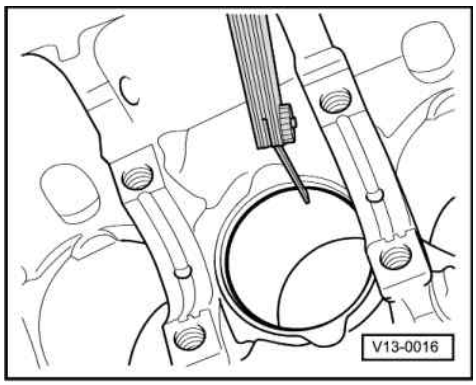

-> Fig. 1 Checking piston ring gap

- Push ring squarely from above down to approx. 15 mm from bottom end of cylinder.

Piston ring		Gap	
		New	Wear limit
Compression rings	mm	0.20...0.40	1.0
Oil scraper ring	mm	0.25...0.50	1.0

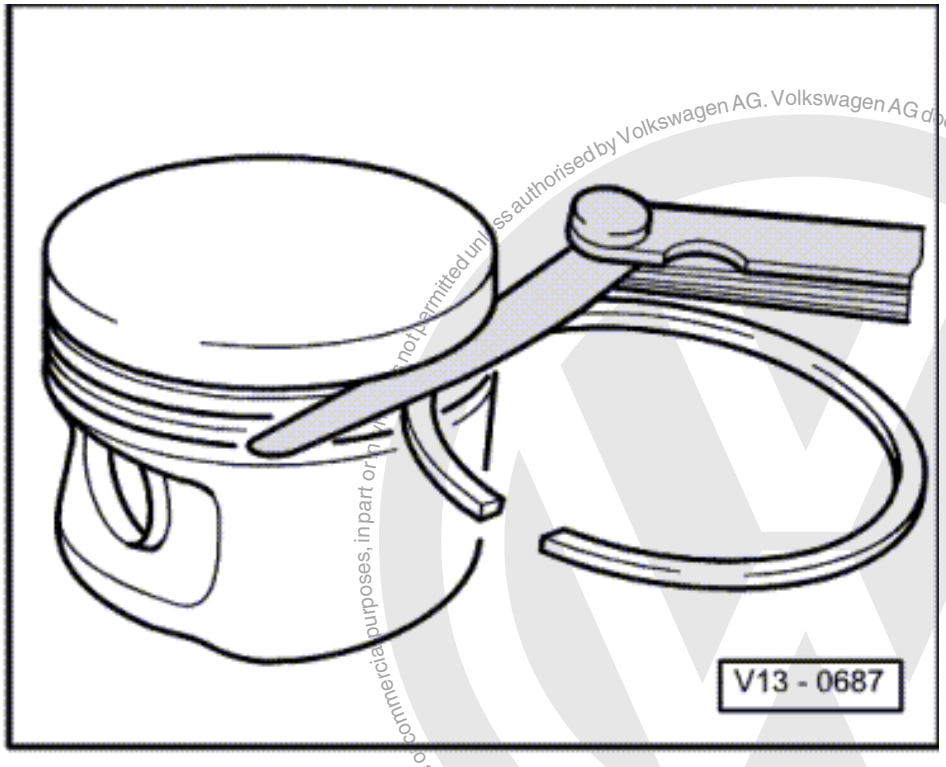

-> Fig. 2 Checking ring to groove clearance

Clean groove before check.

Piston ring		Clearance	
		New	Wear limit
Compression rings	mm	0.02...0.05	0.15

Protected by copyright. Copying for private or commercial purposes, in part or not permitted unless authorised by Volkswagen AG. Volkswagen AG does not guarantee or accept any liability with respect to the correctness of information in this document. Copyright by Volkswagen AG.
satelettronica

Piston ring		Clearance	
Oil scraper ring	mm	0.02...0.05	0.15

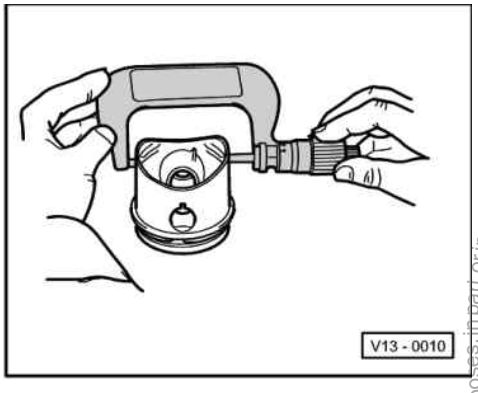

-> Fig. 3 Checking piston

Measure pistons approx. 10 mm from the lower edge of skirt, at 90 ° to the piston pin axis.

Deviation from nominal dimension
max. 0.04 mm

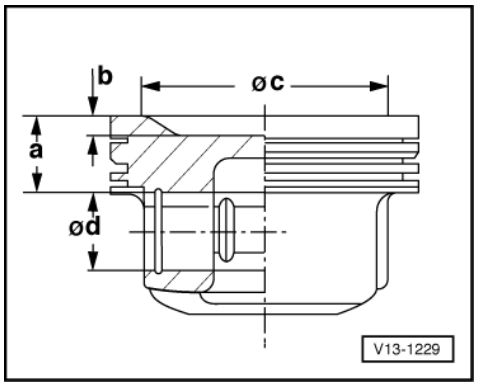

-> Fig. 4 Piston characteristics

Code letters		AFT	1F	ADZ
Dimension "a"	mm	22.0	25.6	22.2
Dimension "b"	mm	2.3	2.3	4.4
Recess ø"c"	mm	61.4	60.0	56.0
Piston pin ø"d"	mm	20.0	20.0	20.0

Protected by copyright. Copying for private or commercial purposes, in part or in whole, is not permitted unless authorised by Volkswagen AG. Volkswagen AG does not guarantee or accept any liability with respect to the correctness of information in this document. Copyright by Volkswagen AG.
satelettronica

Note:

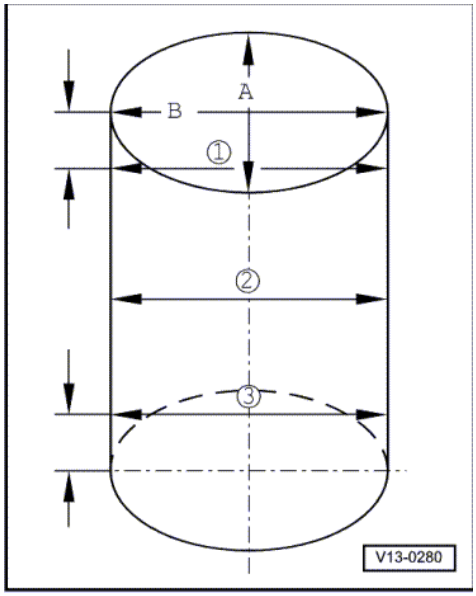

When carrying out repairs only fit pistons and piston pins of the same type and pistons with the same weight class in an engine.

-> Fig. 5 Checking cylinder bores

- Measure bores at 3 locations in both directions -A- across the engine and -B- in line with crankshaft.
- Use internal dial gauge 50...100 mm.
- Deviation from nominal dimension
  max. 0.08 mm

Note:

Measuring the cylinder bores must not be done when the cylinder block is mounted on a repair stand with adapter bracket VW 540, as incorrect measurements would then be possible.

4.2 - Piston and cylinder dimensions

Engine code AFT

Honing dimension		Piston-ø	Cylinder bore-ø
Basic dimen.	mm	80.965	81.01
1st oversize	mm	81.485	81.51

Engine code letters 1F, ADZ

Honing dimension		Piston-ø	Cylinder bore-ø
Basic dimen.	mm	80.985	81.01
1st oversize	mm	81.235	81.26
2nd oversize	mm	81.485	81.51

satelettronica

15 - Cylinder head, Valve gear

1 - Removing and installing cylinder head

1.1 - Removing and installing cylinder head

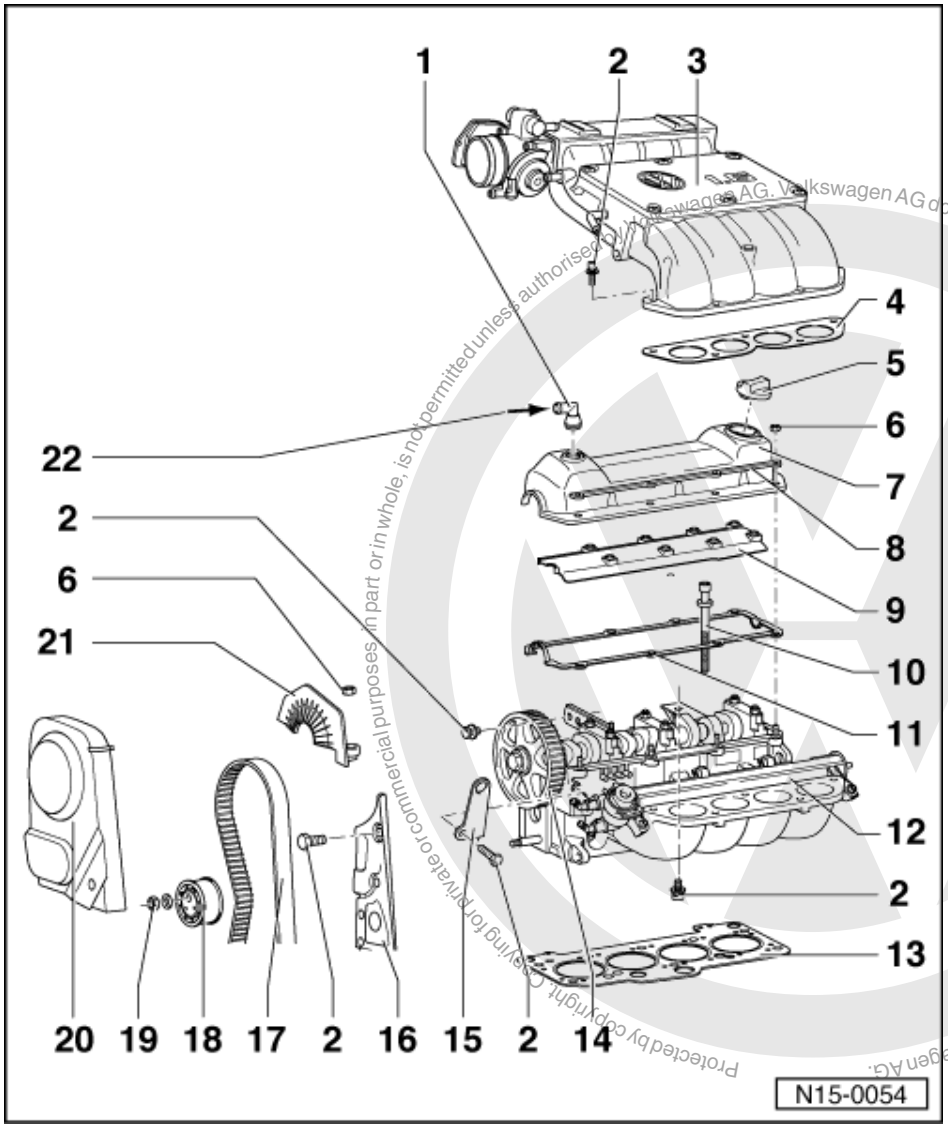

Protected by copyright. Copying for private or commercial purposes, in part or in whole, is not permitted unless authorised by Volkswagen AG. Volkswagen AG does not guarantee or accept any liability with respect to the correctness of information in this document. Copyright by Volkswagen AG.
satelettronica

Checking compressions

=> Page 54

Notes:

- When installing an exchange cylinder head the contact surfaces between bucket tappet and cam must be oiled after installation.
- The plastic protectors fitted to protect the open valves must only be removed immediately before fitting the cylinder head.
- When replacing the cylinder head the complete coolant must be renewed.

Engine code AFT

1 Connection piece

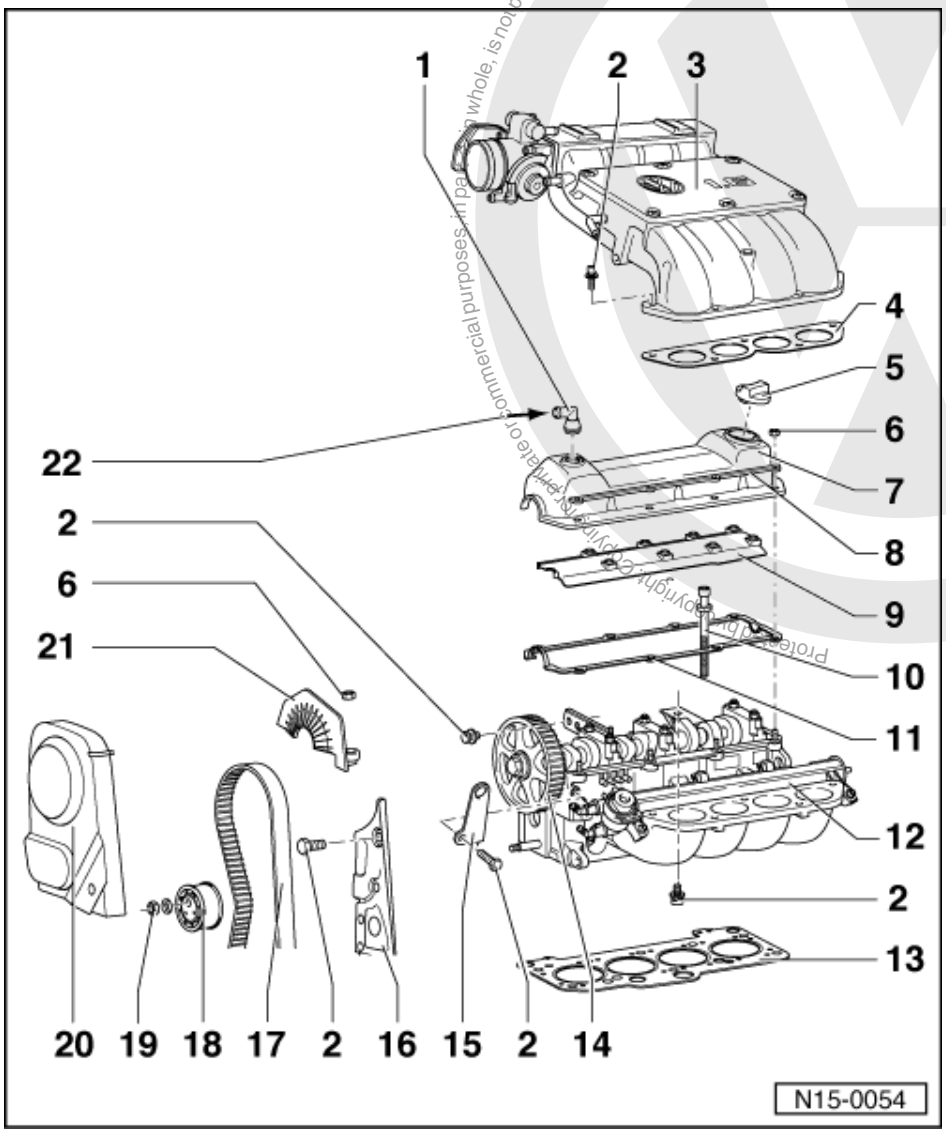

2 20 Nm
3 Intake manifold - upper part
4 Gasket
- Renew

5 Cap
- Renew seal if damaged

6 10 Nm
7 Cylinder head cover
8 Reinforcement strip
9 Oil deflector
10 Cylinder head bolt
- Sequence when loosening and tightening => Page 53 , Removing and installing cylinder head

11 Cylinder head cover gasket
- Renew if damaged
- Before fitting gasket coat transition between bearing cap/cylinder head with D 454 300 A2

Protected by copyright. Copyright by Volkswagen AG. Volkswagen AG does not guarantee or accept any liability with respect to the correctness of information in this document. Copyright by Volkswagen AG. Reproduction for commercial purposes or in part or whole, is not permitted unless authorized by Volkswagen AG.
satelettronica

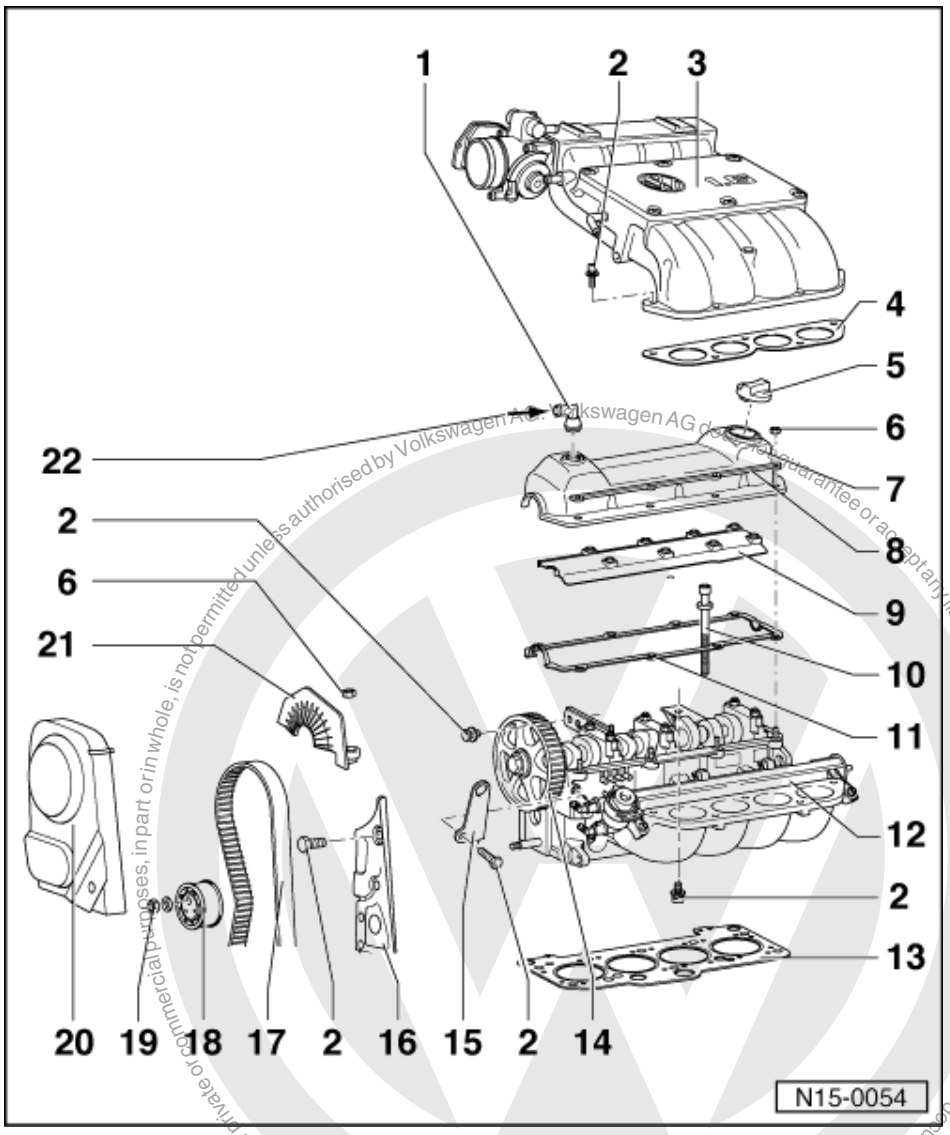

12 Cylinder head

- Check for distortion
  => Page 53 , Fig. 1
- Installing => Page 53
- After replacing renew the complete coolant

13 Cylinder head gasket

- Renew
- After replacing renew the complete coolant

14 Camshaft sprocket

- Note position when installing the toothed belt
  => Page 24 , removing, installing and tensioning toothed belt

15 Lifting eye

16 Rear toothed belt guard

satelettronica

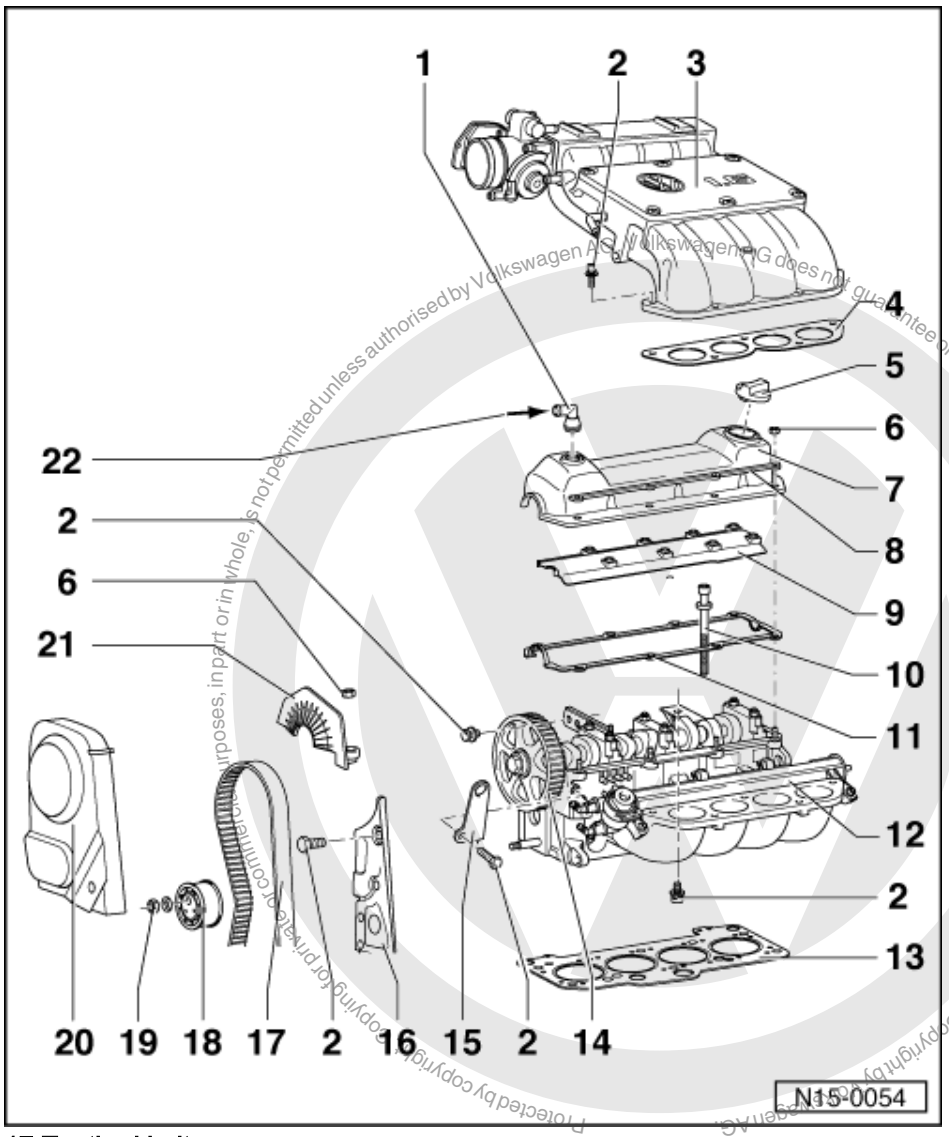

17 Toothed belt
- Check for wear
- Do not kink
- Removing and installing
  => Page 24

18 Tensioner

19 45 Nm

20 Toothed belt guard - upper part

21 Toothed belt guard

22 From the crankcase breather
- =>Page 19 , Item 13

satelettronica

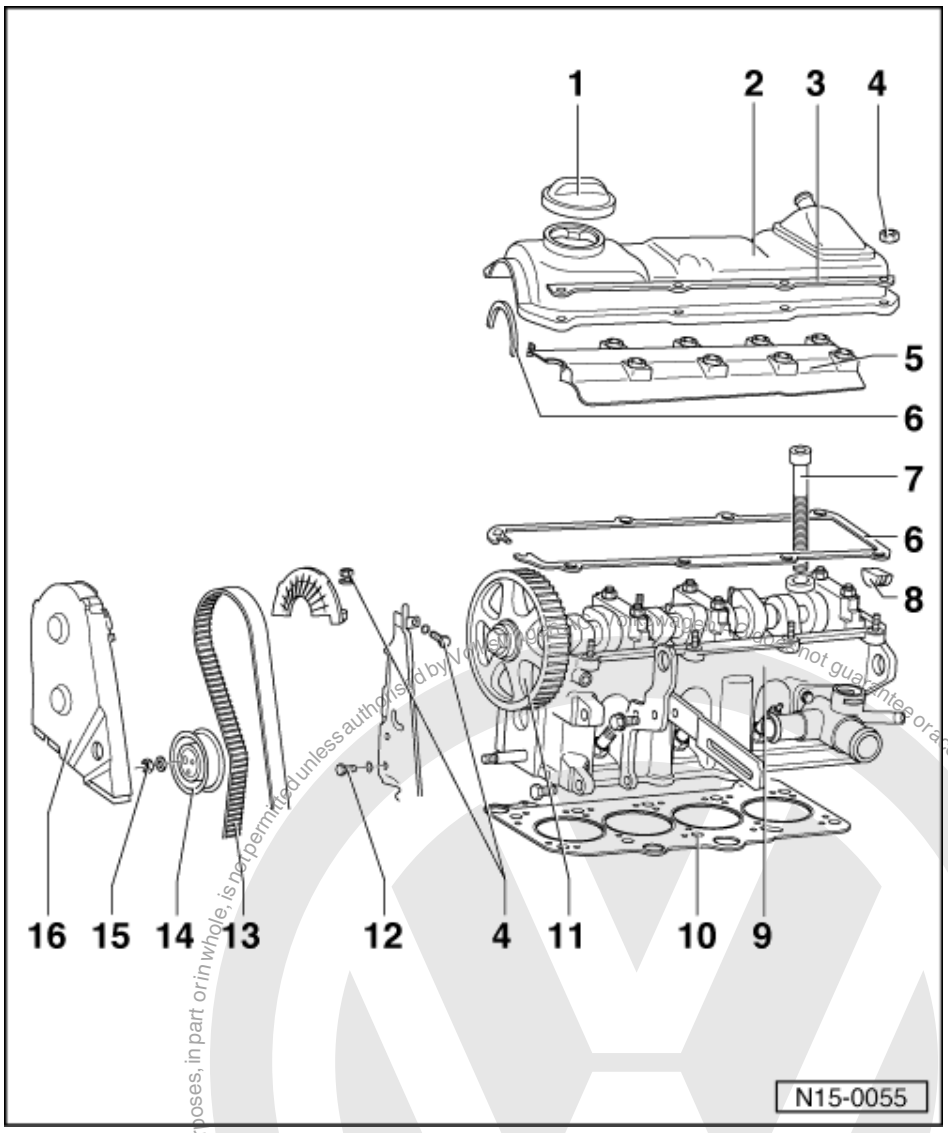

Engine code 1F, ADZ

1 Cap
- Renew seal if damaged

2 Cylinder head cover

3 Reinforcement strip

4 10 Nm

5 Oil deflector

6 Cylinder head cover gasket
- Renew

7 Cylinder head bolt
- Check type
  => Fig. 2
- Sequence when loosening and tightening => Page 53 , Removing and installing cylinder head

8 Sealing plugs
- Renew

Protected by copyright. Copying for private or commercial purposes, in part or in whole, is not permitted unless authorised by Volkswagen AG. Volkswagen AG does not guarantee or accept any liability with respect to the correctness of information in this document. Copyright by Volkswagen AG.
satelettronica

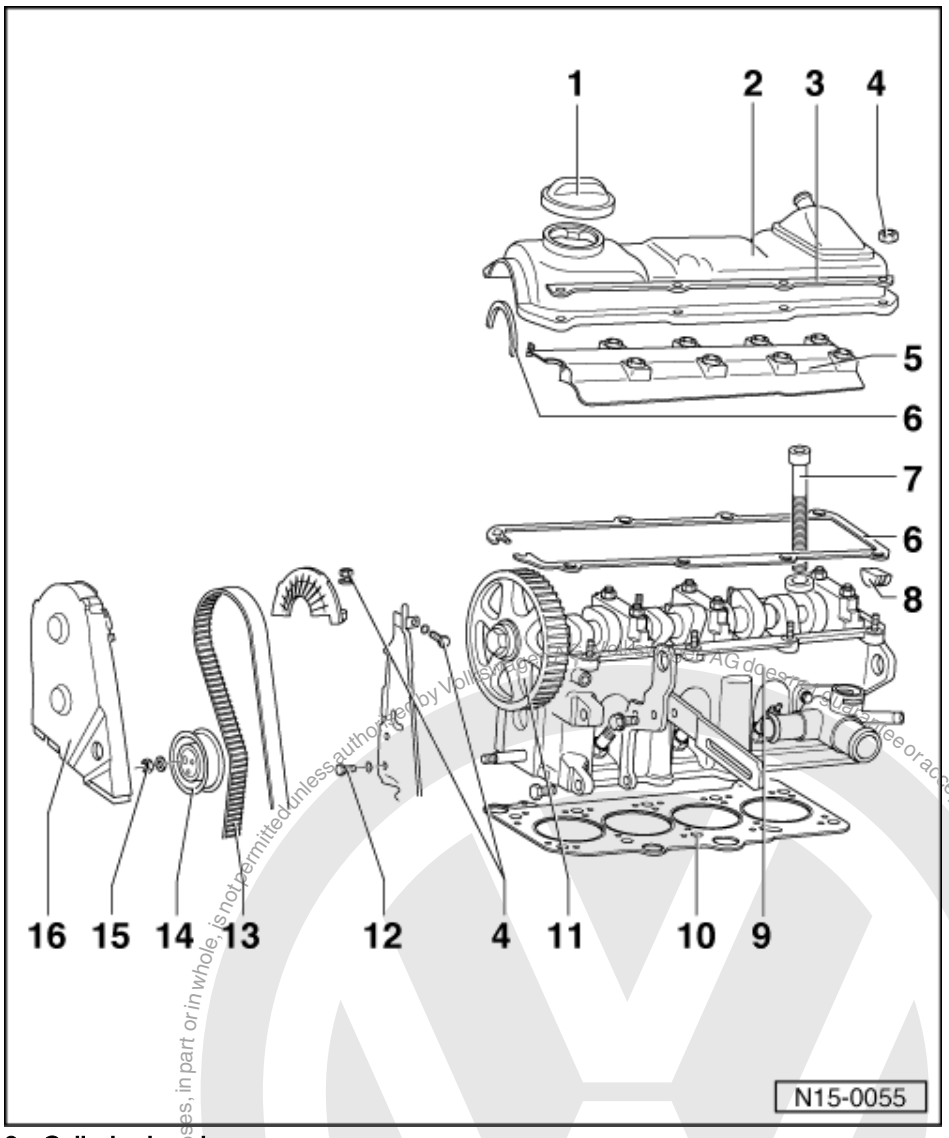

9 Cylinder head
- Check for distortion => Fig. 1
- Removing and installing
  => Page 53
- After replacing renew the complete coolant

10 Cylinder head gasket
- Renew
- If replaced renew the complete coolant

11 Camshaft sprocket
- Note position when installing toothed belt
  => Page 24 , removing, installing and tensioning toothed belt

12 25 Nm

13 Toothed belt
- Check for wear
- Do not kink
- Removing and installing
  => Page 24

satelettronica

Copyright. Copying for private or commercial purposes, in part or in whole, is not permitted unless authorised by Volkswagen AG. Volkswagen AG does not guarantee or accept any liability with respect to the correctness of information in this document.

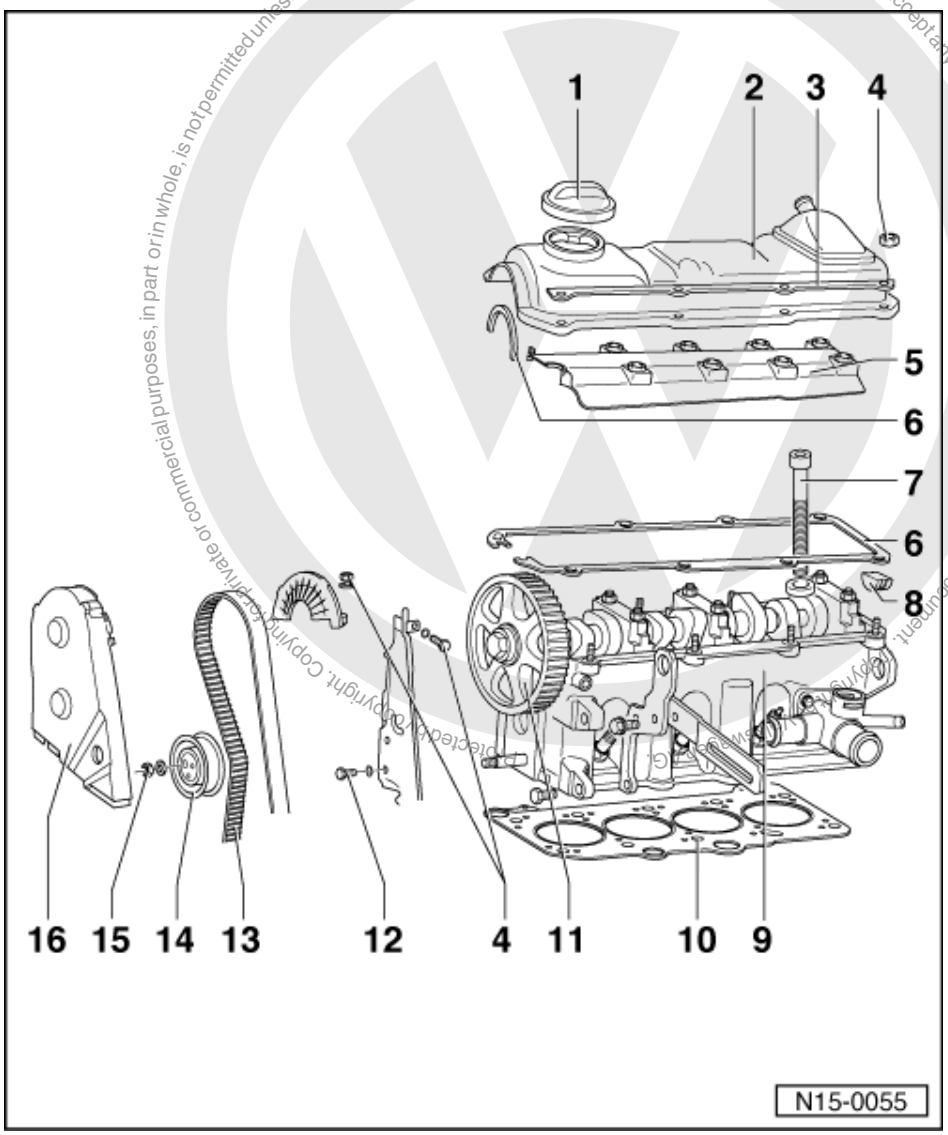

14 Tensioner
15 45 Nm
16 Toothed belt guard - upper part

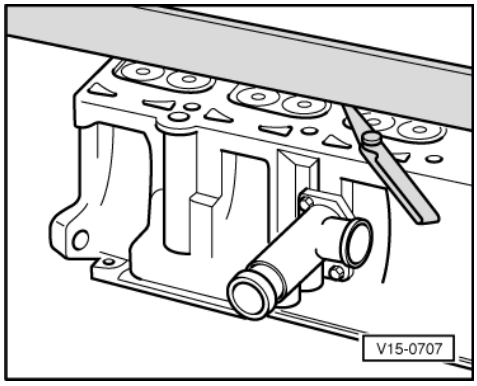

satelettronica

Protected copyright. Copyright by Volkswagen AG. Volkswagen AG does not guarantee or accept any liability with respect to the correctness of information in this document. Copyright by Volkswagen AG. Reproduction is authorised by Volkswagen AG, is not permitted unless authorised by Volkswagen AG. Volkswagen AG does not guarantee or accept any liability with respect to the correctness of information in this document. Copyright by Volkswagen AG. Protected copyright. Copying for private or commercial purposes, in part or in whole, is not permitted unless authorised by Volkswagen AG. Volkswagen AG does not guarantee or accept any liability with respect to the correctness of information in this document. Copyright by Volkswagen AG.

-> Fig. 1 Checking cylinder head for distortion

Max. permissible distortion: 0.1 mm

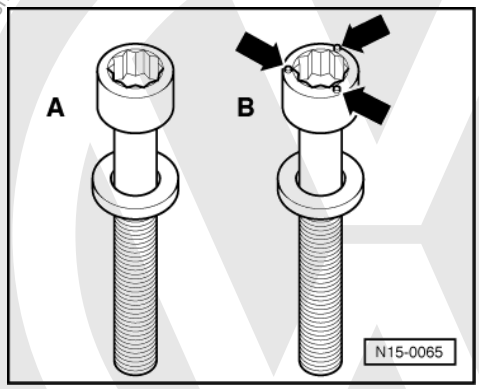

-> Fig. 2 Cylinder head bolts identifying features

A - Bolt with smooth head

- For soft material cylinder head gasket

B - Bolt with raised portions on bolt head
-arrows-

- For metal cylinder head gasket

1.2 - Removing and installing cylinder head

Special tools, testers and auxiliary items

- Guide pin 3070
- Torque wrench V.A.G 1332 (40 - 200 Nm)

Conditions

- Engine cold
- Pistons not positioned at TDC

Notes:

- Only remove the new cylinder head gasket from its packing immediately before installing.
- Handle the new gasket with extreme care. Damage to the silicone coating and in the area of the beading will lead to leaks.
- If the metal cylinder head gasket is being fitted as a replacement for the previous soft gasket, new cylinder head bolts must also be installed. Identifying characteristics => Page 53 , Fig. 2

Removing

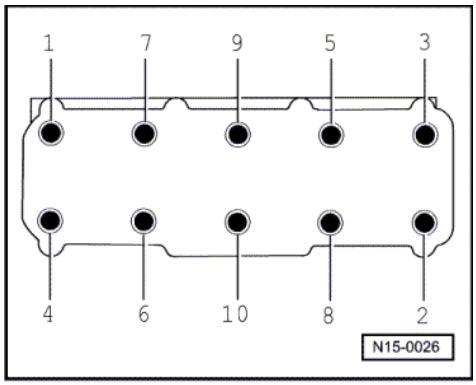

satelettronica

- -> Maintain sequence when loosening and tightening cylinder head bolts.

Installing

- Carefully remove remains of gasket. When doing this ensure that no long scoring or scratches are formed (when using abrasive paper it must not have a grade less than 100).
- Carefully remove metal particles and emery remains.

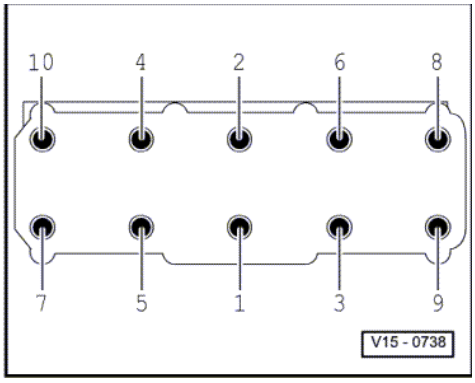

- -> To centralize screw guide pins from 3070 into holes for cylinder head bolts 8 and 10.
- Fit cylinder head gasket. Lettering (Part No.) must be readable.
- Fit cylinder head, screw in 8 remaining cylinder head bolts and tighten by hand.
- Remove guide pins with removal tool from 3070 and install cylinder head bolts.

- Tighten cylinder head in four stages in sequence shown as follows:
- 1. Tighten initially with torque wrench:
  Stage I = 40 Nm
  Stage II = 60 Nm
- 2. Turn further with normal spanner:
  Stage III = 1/4 turn (90 °)
  Stage IV = 1/4 turn (90 °)

1.3 - Checking compressions

Special tools, testers and auxiliary items

- Spark plug key 3122B
- Compression tester V.A.G 1381 or V.A.G 1763

Test conditions

- Engine oil temperature min. 30 °C.

Test sequence

- If fitted, separate speed sender connection.
- Pull plug off Hall sender (distributor).
- Fully open throttle valve.
- Check compressions with compression tester V.A.G 1381 or V.A.G 1763.

Note:

Using the compression tester => Operating instructions.

- Operate starter until tester shows no further pressure increase.

Protected by copyright. Copying for private or commercial purposes, in part or in whole, is not permitted unless authorised by Volkswagen AG. Volkswagen AG does not guarantee or accept any liability with respect to the correctness of information in this document. Copyright by Volkswagen AG.

satelettronica

Compression pressure:

Engine code	new	Wear limit
AFT, ADZ	10...13 bar	7.5 bar
1F	9...12 bar	7.0 bar

Permissible difference between all cylinders:
max. 3 bar

2 - Servicing valve gear

2.1 - Servicing valve gear

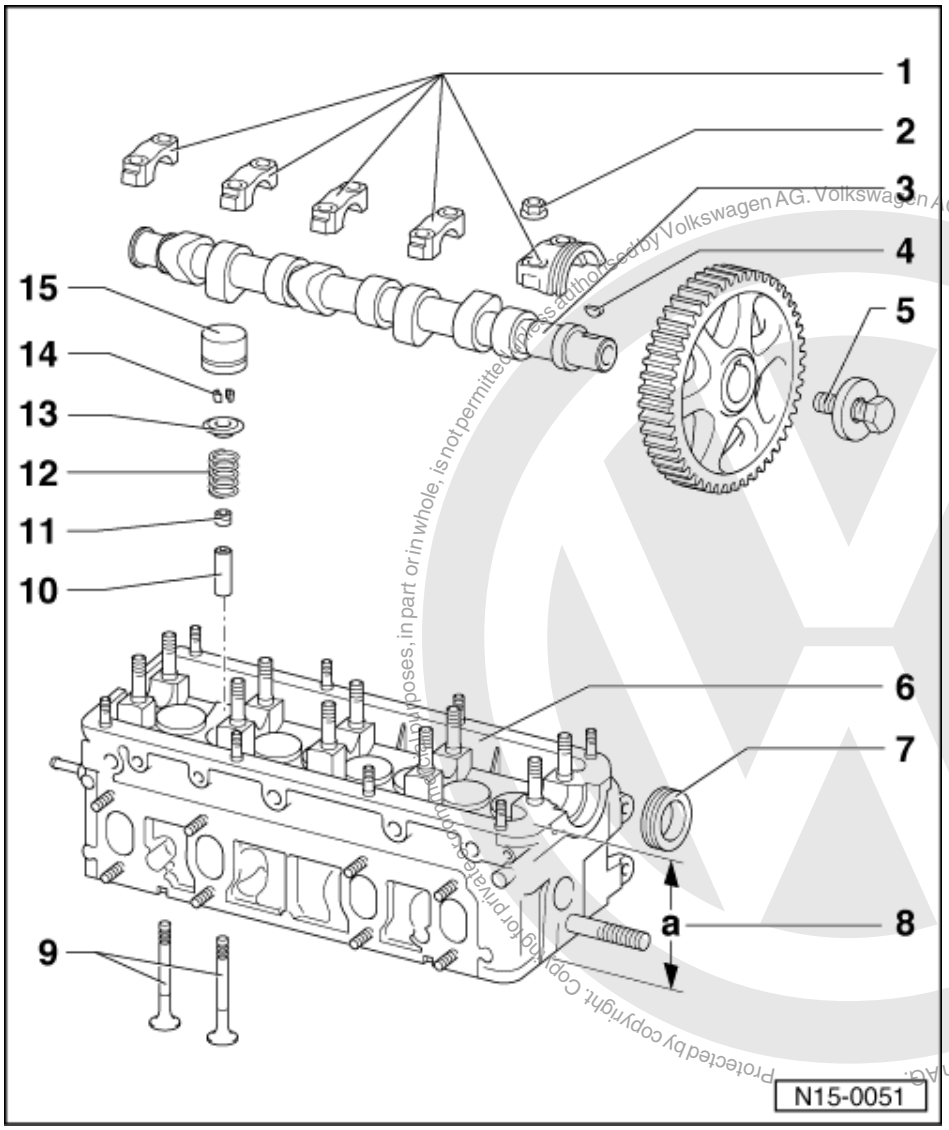

Note:

Cylinder heads which have cracks between the valve seats or between valve seat inserts and the spark plug thread can be used further without reducing service life, provided the cracks do not exceed a maximum of 0.5 mm in width, or when no more than the first spark plug thread is cracked.

Protected by copyright. Copying for private or commercial purposes, in part or in whole, is not permitted unless authorised by Volkswagen AG. Volkswagen AG does not guarantee or accept any liability with respect to the correctness of information in this document. Copyright by Volkswagen AG.
satelettronica

Engine code AFT

1 Bearing cap
- Installation position => Page 63
  Fig. 2
- Installation sequence
  => Page 68 , removing and installing camshaft
- Lightly coat bearing cap contact surface with sealant AMV 174 004 01

2 20 Nm

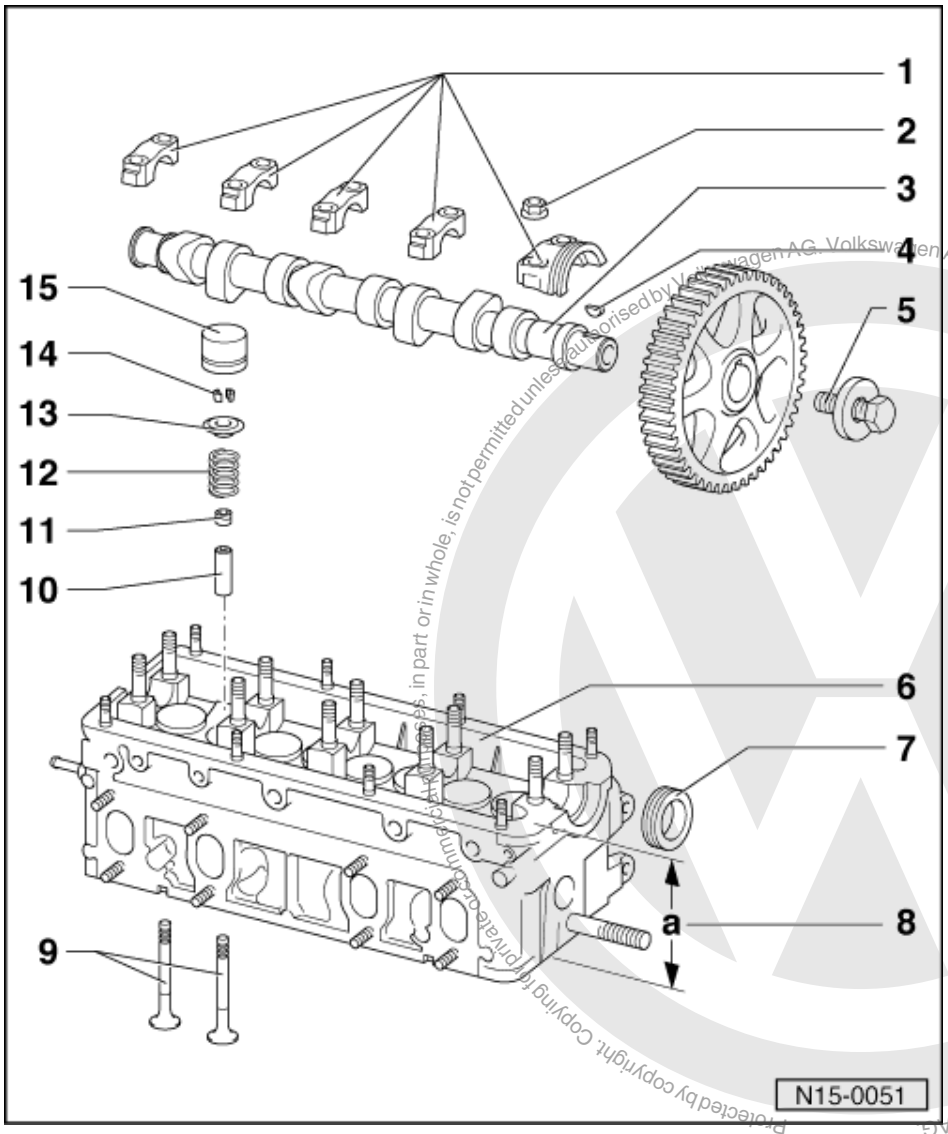

3 Camshaft
- Checking axial clearance
  => Page 63 , Fig. 1
- Removing and installing
  => Page 68
- Checking radial clearance with plastigage
  Wear limit: 0.1 mm
- Run-out: max. 0.01 mm
- Identification and valve timing
  => Page 65 , Fig. 5

4 Woodruff key
- Ensure tight fit

5 80 Nm
- Counter-hold with 3036 to loosen and tighten

Protected by copyright. Copying for private or commercial purposes, in part or in whole, is not permitted unless authorised by Volkswagen AG. Volkswagen AG does not guarantee or accept any liability with respect to the correctness of information in this document. Copyright by Volkswagen AG.
satelettronica

6 Cylinder head
- Exchange cylinder head with camshaft bearing shells => Page 63 , Fig. 3
- See note => Page 55
- Reworking valve seats => Page 65

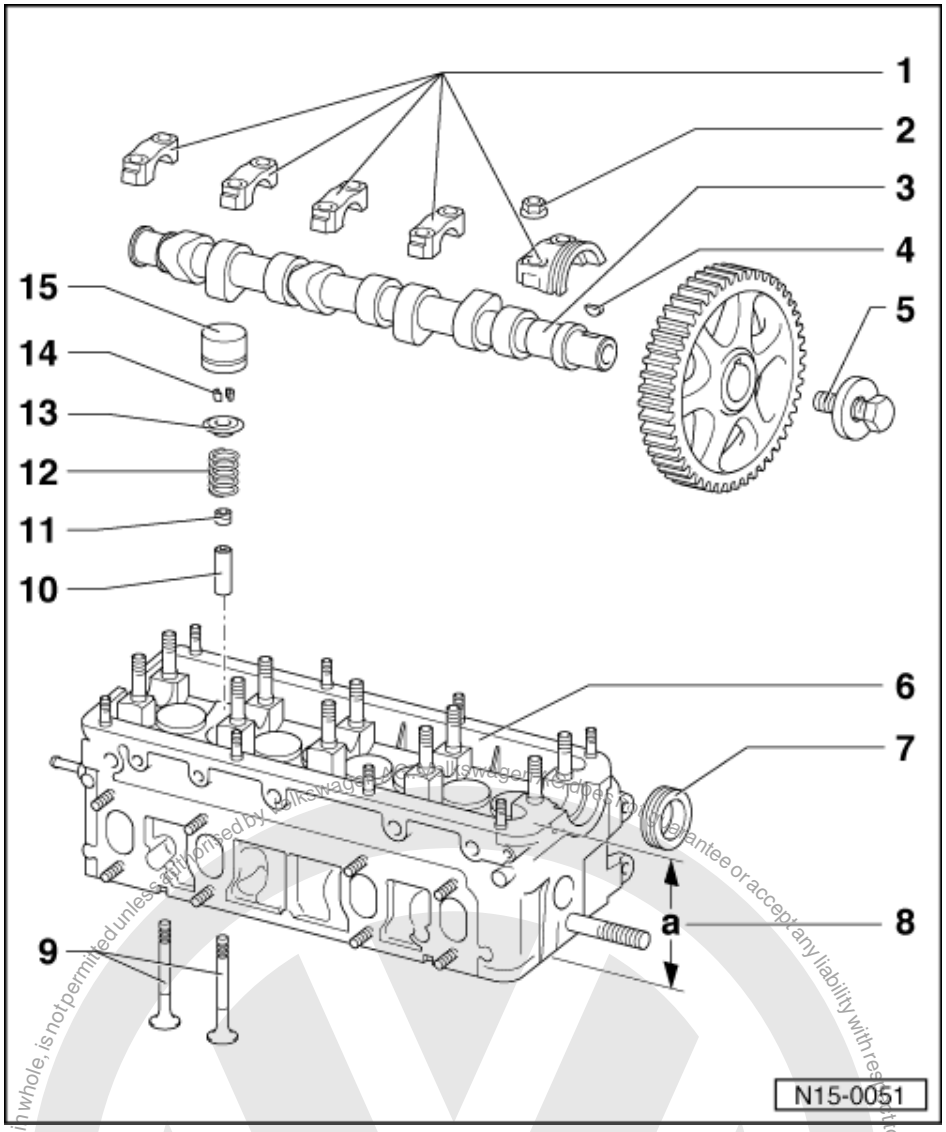

7 Oil seal
- Renewing=> Page 67

8 Cylinder head reworking dimension
- Minimum height: a = 132.6 mm

9 Valves
- Do not rework only grinding-in is permitted
- Valve dimensions => Page 64 , Fig. 4

10 Valve guide
- Checking => Page 71
- Renewing => Page 71
- Service version with collar

11 Valve stem seal
- Renewing=> Page 72
- Remove and install with 3047A

satelettronica

12 Valve spring

- Removing and installing:
  Cylinder head
  removed: with 2037
  installed: => Page 72 , renewing valve stem seals

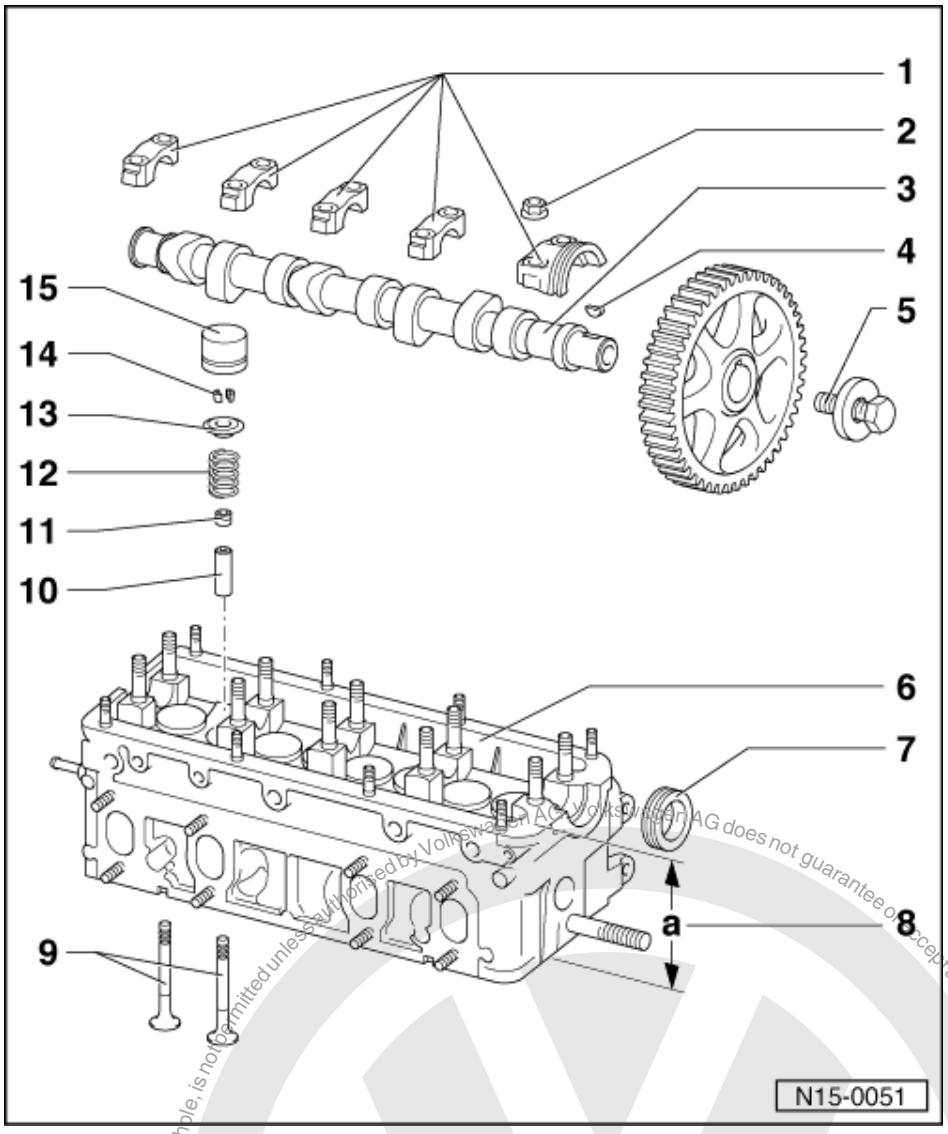

13 Upper valve spring plate
14 Cotters
15 Bucket tappet

- Do not interchange
- With hydraulic valve clearance compensation
- Checking => Page 70
- Store with cam lobe contact surface downwards
- Before installing check camshaft axial clearance => Page 63 , Fig. 1
- Oil contact surface

Protected by copyright. Copying for private or commercial purposes, in part or in whole, is not permitted unless authorised by Volkswagen AG. Volkswagen AG does not guarantee or accept any liability with respect to the correctness of information in this document. Copyright by Volkswagen AG.
satelettronica

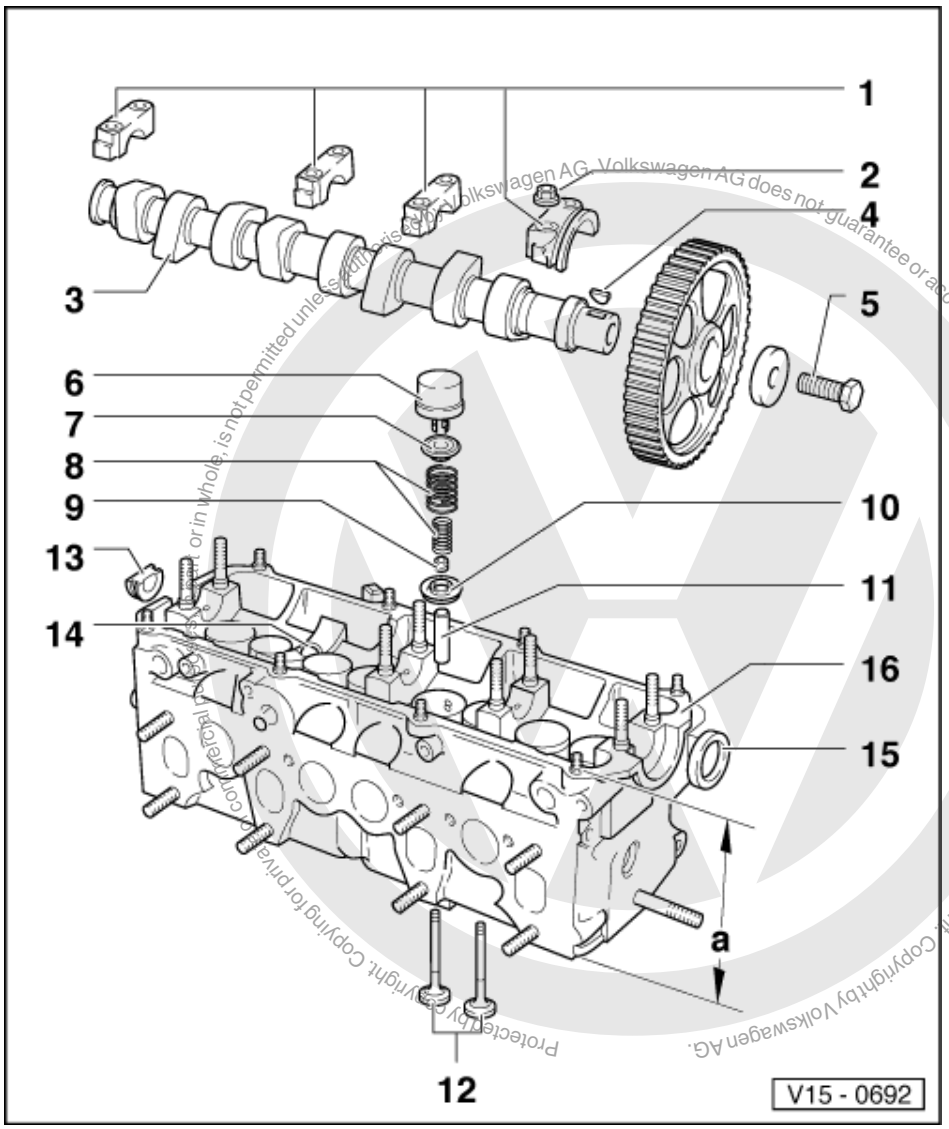

Engine code 1F, ADZ

1 Bearing cap
- Installation position => Fig. 2
- Installation sequence
  => Page 68 , removing and installing camshaft
- Lightly coat bearing cap contact surface with sealant AMV 174 004 01

2 20 Nm

3 Camshaft
- Checking axial clearance => Fig. 1
- Removing and installing
  => Page 68
- Checking radial clearance with plastigage
  Wear limit: 0.1 mm
- Run-out: max. 0.01 mm
- Identification and valve timing
  => Fig. 5

4 Woodruff key
- Ensure tight fit

5 80 Nm

satelettronica

- Counter-hold with 3036 to loosen and tighten

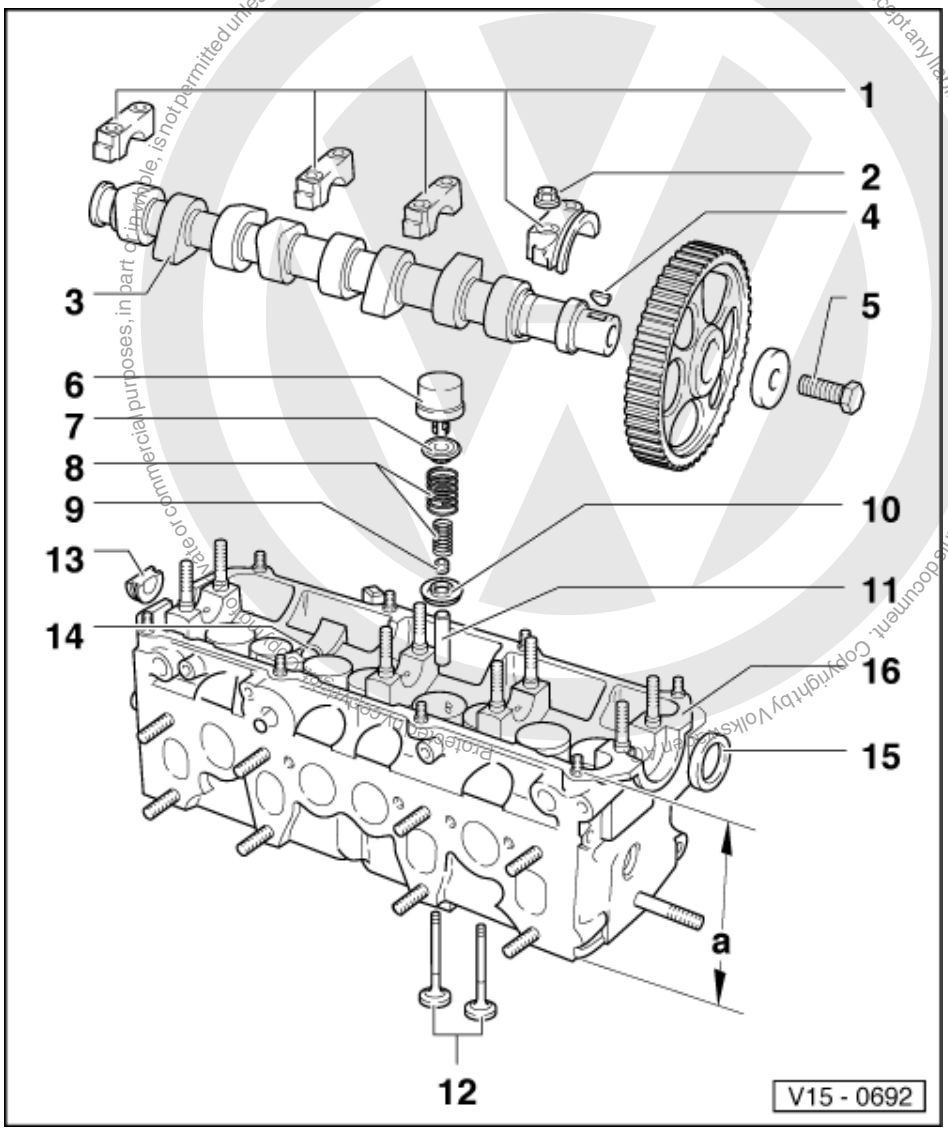

6 Bucket tappet
- Do not interchange
- With hydraulic valve clearance compensation
- Checking => Page 70
- Store with cam lobe contact surface downwards
- Before installing check camshaft axial clearance => Fig. 1
- Oil contact surface

7 Upper valve spring plate

8 Valve springs
- Removing and installing:
  Cylinder head
  removed: with 2037
  installed: => Page 72 , renewing valve stem seals
- For engine code ADZ only one valve spring

satelettronica

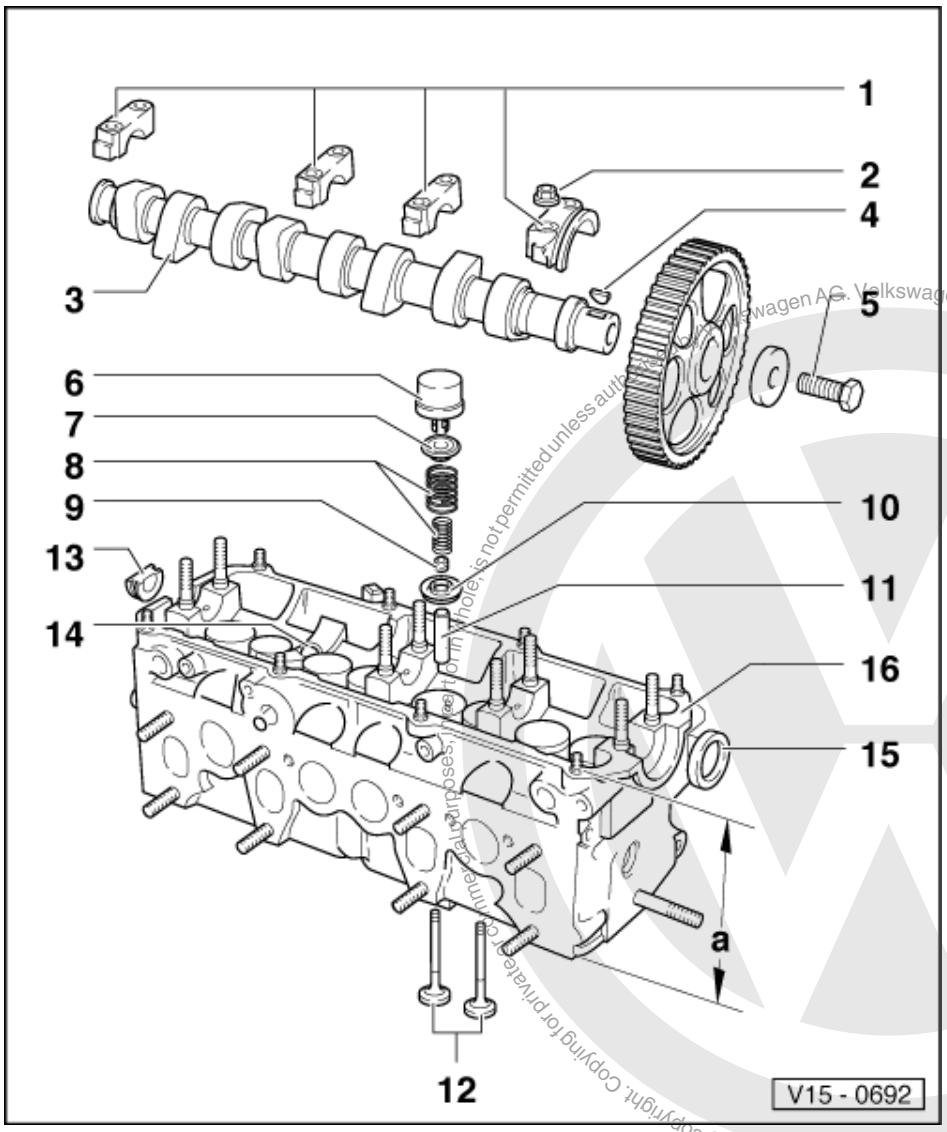

9 Valve stem seal
- Renewing=> Page 72

10 Lower valve spring plate
- Remove and install with 3047A
- Only engine code 1F

11 Valve guide
- Checking => Page 71
- Renewing => Page 71
- Service version with collar

12 Valves
- Do not rework only grinding-in is permitted
- Valve dimensions => Fig. 4

13 Sealing plugs
- Renew

14 Oil return stop jet

15 Oil seal
- Renewing=> Page 67

Protected by copyright. Copying for private or commercial purposes, in part or in whole, is not permitted unless authorised by Volkswagen AG. Volkswagen AG does not guarantee or accept any liability with respect to the correctness of information in this document. Copyright by Volkswagen AG.
satelettronica

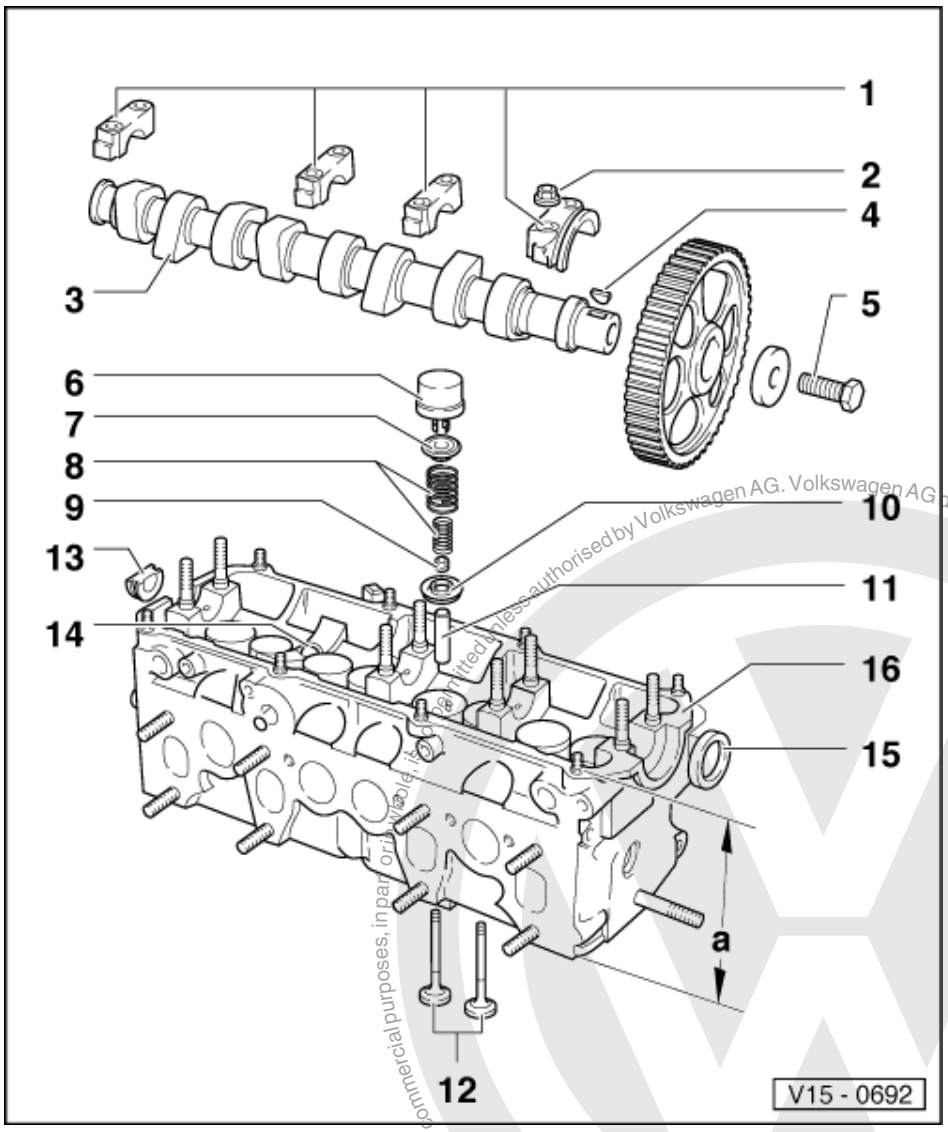

16 Cylinder head

- Exchange cylinder head with camshaft bearing shells => Fig. 3
- See notes
  => Page 55
- Reworking valve seats
  => Page 65
- Reworking dimension:
  Minimum height: a = 132.6 mm

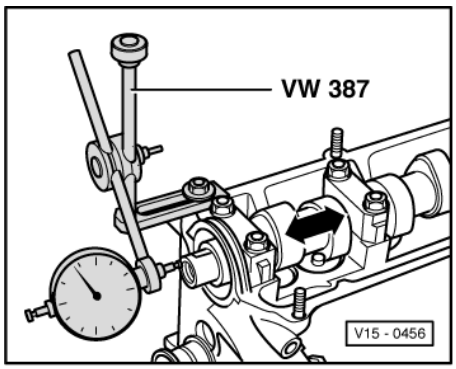

Protected by copyright. Copying for private or commercial purposes, in part or in whole, is not permitted unless authorised by Volkswagen AG. Volkswagen AG does not guarantee or accept any liability with respect to the correctness of information in this document. Copyright by Volkswagen AG.
satelettronica

-> Fig. 1 Checking camshaft axial clearance

Wear limit: 0.15 mm

Check with bucket tappets removed and with first and last bearing caps fitted.

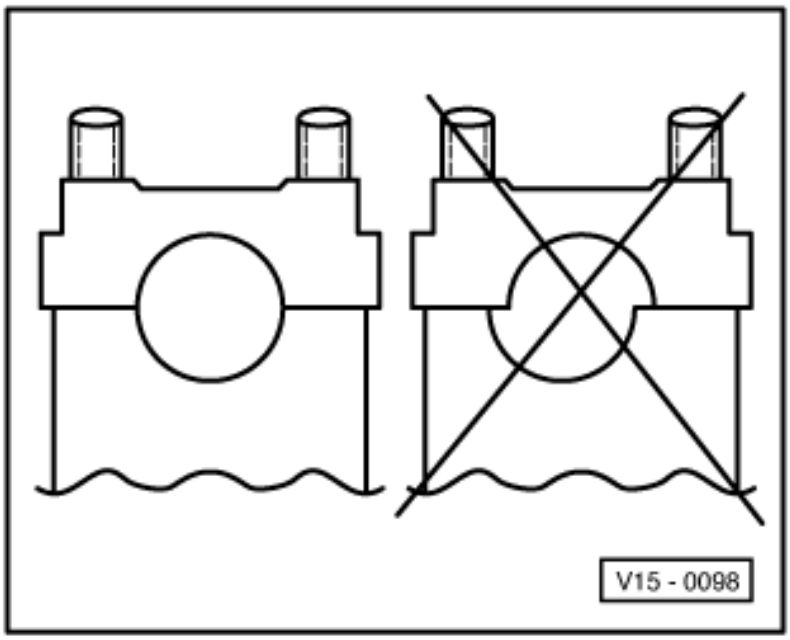

-> Fig. 2 Fitting position of camshaft bearing caps

Note offset. Before installing camshaft fit bearing caps and determine fitting position.

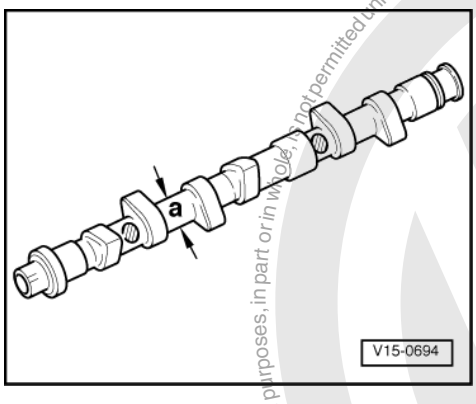

-> Fig.3 Exchange cylinder heads with camshaft bearing shells

Exchange cylinder heads/exchange engines are in some cases supplied with camshaft bearing shells.

A - Cylinder head with standard dimension camshaft
Engine code AFT: a = 25.97 mm ø
Engine code 1F, ADZ : a = 26.00 mm ø
B - Cylinder head with undersize camshaft

Protected by copyright. Copyright by Volkswagen AG.
Copyright by Volkswagen AG. Volkswagen AG does not guarantee or accept any liability with respect to the correctness of information in this document.
Reproduction for commercial purposes, in part or in whole, is not permitted unless authorised by Volkswagen AG.
satelettronica

a = 25.75 mm ø and yellow coloured spot on VW-Audi emblem

Note:

Undersize camshafts will not be supplied as a replacement part. In cases of repair install standard camshaft with the corresponding bearing shells.

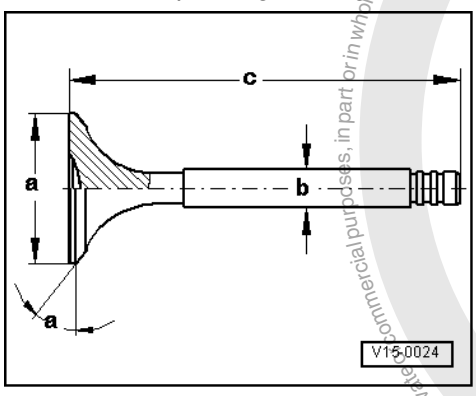

-> Fig. 4 Valve dimensions

Note:

Valves must not be reworked. Only lapping-in is permitted.

Engine code AFT

Dimension		Inlet valve	Exhaust valve
øa	mm	39.5 ±0.15	32.9 ±0.15
øb	mm	6.92 ±0.02	6.92 ±0.02
c	mm	91.85	91.15
α	<°	45	45

Engine code 1F

Dimension		Inlet valve	Exhaust valve
øa	mm	38.0	33.0
øb	mm	7.97	7.95
c	mm	91.90 - 0.90	91.20 - 0.40
α	<°	45	45

Engine code letters ADZ

Dimension		Inlet valve	Exhaust valve
øa	mm	37.95 ±0.15	32.9 ±0.15
øb	mm	6.92 ±0.02	6.92 ±0.02
c	mm	91.85	91.15
α	<°	45	45

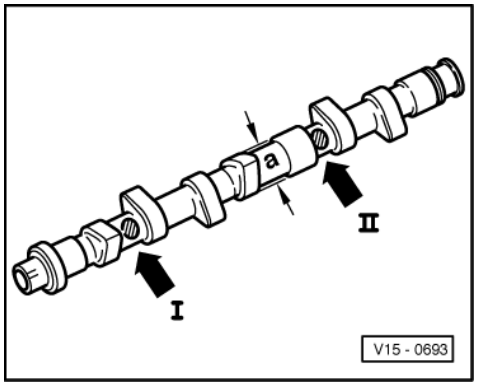

Protected by copyright. Copying for private or commercial purposes, in part or in whole, is not permitted unless authorised by Volkswagen AG. Volkswagen AG does not guarantee or accept any liability with respect to the correctness of information in this document. Copyright by Volkswagen AG.
satelettronica

-> Fig.5 Camshaft identification, valve timing

Identification

- Cam base diameter: a = 34 mm ø
- Identification by stamped numbers and letters between inlet and exhaust cams:

Engine code	ADZ	AFT	1F
Cylinder 1 -arrow I-	Q	A	M
Cylinder 3 -arrow II-	026	050	026

Valve timing at 1 mm valve lift

Engine code	ADZ	AFT	1F
Inlet opens ATDC	5°	1°	4°
Inlet closes ABDC	41°	37°	26°
Exhaust opens BBDC	37°	41°	24°
Exhaust closes BTDC	1°	5°	2°

2.2 - Reworking valve seats

Special tools, testers and auxiliary items

- Depth gauge
- Valve seat refacing tool

Notes:

- When repairing engines with leaking valves, it is not always sufficient to reface or renew valve seats and valves. It is also necessary to check the valve guides for wear. This is particularly important on high mileage engines.
- The valve seats should only be reworked just enough to produce a perfect seating pattern. The maximum permissible reworking dimension must be calculated before work is carried out. If the reworking dimension is exceeded, the function of the hydraulic tappets can no longer be guaranteed and therefore the cylinder head should be renewed.

Calculating max. permissible reworking dimension

- Insert valve and press firmly against seat.

Note:

If the valve is to be renewed as part of a repair, use a new valve for the calculation.

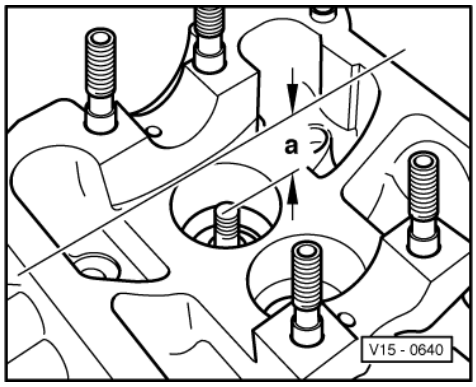

Protected by copyright. Copyright by Volkswagen AG. Volkswagen AG does not guarantee or accept any liability with respect to the correctness of information. Copyright by Volkswagen AG.
satelettronica

- -> Measure distance -a- between end of valve stem and upper edge of cylinder head.
- Calculate max. permissible reworking dimension from measured distance -a- and minimum dimension.

Minimum dimension:
Inlet valve 33.8 mm
Exhaust valve 34.1 mm

Measured distance minus minimum dimension
= max. permissible reworking dimension.

Example:

-	Measured distance -a-	35.1	mm
	Minimum dimension	34.1	mm
=	max. perm. rework dimension	1.0	mm

Note:

If the measured distance -a- is smaller than the minimum dimension, repeat measuring process with new valves and if necessary use shorter valves (valve length -c- =>Page 64 , Fig. 4) or renew cylinder head.

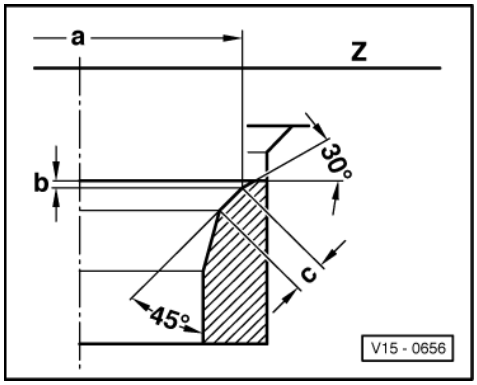

-> Reworking inlet valve seat

Dimension	Inlet valve seat	
	Engine code 1F, ADZ	Engine code AFT
ø a mm	37.2	39.2
ø b mm	max. permissible reworking dim.	
c mm	approx. 2.0	
Z	Cylinder head lower edge	
45°	Valve seat angle	
30°	Upper correction angle	

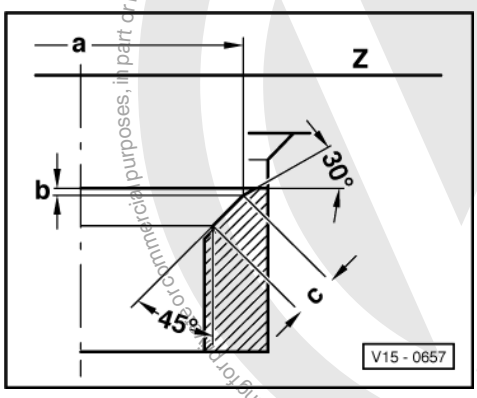

satelettronica
Protected by copyright. Copyright for the or commercial purposes, in part or in whole, is not permitted unless authorised by Volkswagen AG. Volkswagen AG does not guarantee or accept any liability with respect to the correctness of information in this document. Copyright by Volkswagen AG.

-> Reworking exhaust valve seat

Dimension	Exhaust valve seat
ø a mm	32.4
ø b mm	max. permissible reworking dim.
c mm	max. 2.4
Z	Cylinder head lower edge
45°	Valve seat angle
30°	Upper correction angle

Note:
Exhaust valve seat inserts also have an additional internal constriction. When reworking ensure that the radius of the constriction is not damaged.

2.3 - Removing and installing camshaft oil seal

Special tools, testers and auxiliary items
- Counter-hold tool 3036
- Oil seal extractor 2085
- Oil seal fitting tool 10-203
- Torque wrench V.A.G 1332 (40 - 200 Nm)

Removing

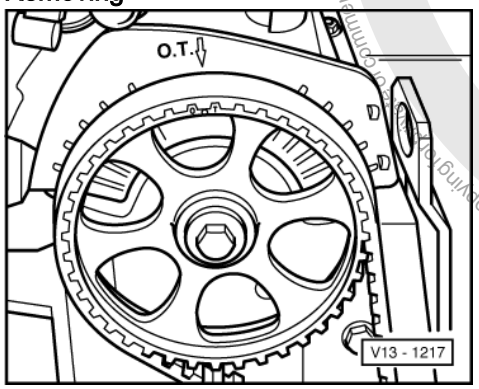

- Remove toothed belt guard - upper part.
- Loosen camshaft sprocket (counter-hold with 3036).
- -> Set camshaft sprocket to TDC No. 1 cylinder by turning the crankshaft. Mark on camshaft sprocket must align with arrow on toothed belt guard.
- Release tensioner and remove toothed belt.
- Pull off camshaft sprocket.
- Remove woodruff key from the camshaft.
- Screw camshaft sprocket securing bolt with washer fully into camshaft.
- Unscrew inner part of oil seal extractor 2085 two turns (approx. 3 mm) out of the outer part and lock in position with knurled screw.

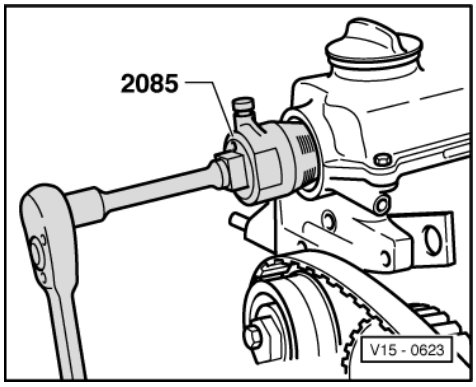

Protected by copyright. Copying for commercial purposes, in part or in whole, is not permitted without authorised by Volkswagen AG. Volkswagen AG does not guarantee or accept any liability with respect to the correctness of information in this document. Copyright by Volkswagen AG.
satelettronica

- -> Lubricate threaded head of oil seal extractor, place it in position and exerting firm pressure screw it into oil seal as far as possible.
- Loosen knurled screw and turn inner part of extractor against camshaft until oil seal has been extracted.
- Clamp flats of oil seal extractor in vice. Remove oil seal with pliers.

Installing

- Lightly oil sealing lip of oil seal.
- Start oil seal with sleeve from 10-203 and press in onto stop with 10-203.
- Install camshaft sprocket and tighten to
  80 Nm
  (counter-hold with 3036).
- Install and tension toothed belt (adjusting valve timing)
  => Page 24 .

2.4 - Removing and installing camshaft

Special tools, testers and auxiliary items

- Counter-hold tool 3036
- Torque wrench V.A.G 1331 (5 - 50 Nm)
- Torque wrench V.A.G 1332 (40 - 200 Nm)

Removing

- Remove toothed belt guard upper part.
- Loosen camshaft sprocket (counter-hold with 3036).

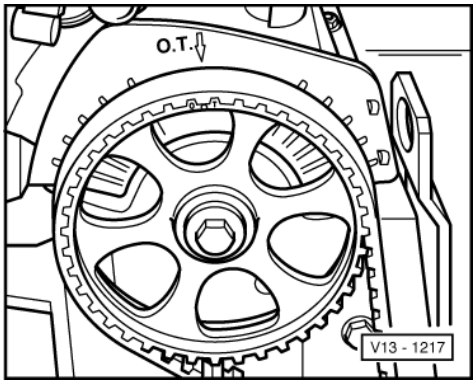

- -> Set camshaft sprocket to TDC No. 1 cylinder by turning the crankshaft. Mark on camshaft sprocket must align with arrow on toothed belt guard.
- Release tensioner and take off toothed belt.

Engine code AFT:

- Remove intake manifold upper part.

- Remove cylinder head cover.
- Pull off camshaft sprocket.
- Remove woodruff key from camshaft.

Engine code AFT

- First remove bearing caps 1, 3 and 5. Loosen bearing caps 2 and 4 alternately and diagonally.

Engine code letters 1F, ADZ

- First remove bearing caps 1 and 3.

satelettronica

- Slacken off bearing caps 2 and 5 alternately and diagonally.

Installing

Notes:

- When installing the camshaft No. 1 cylinder cams must point upwards.

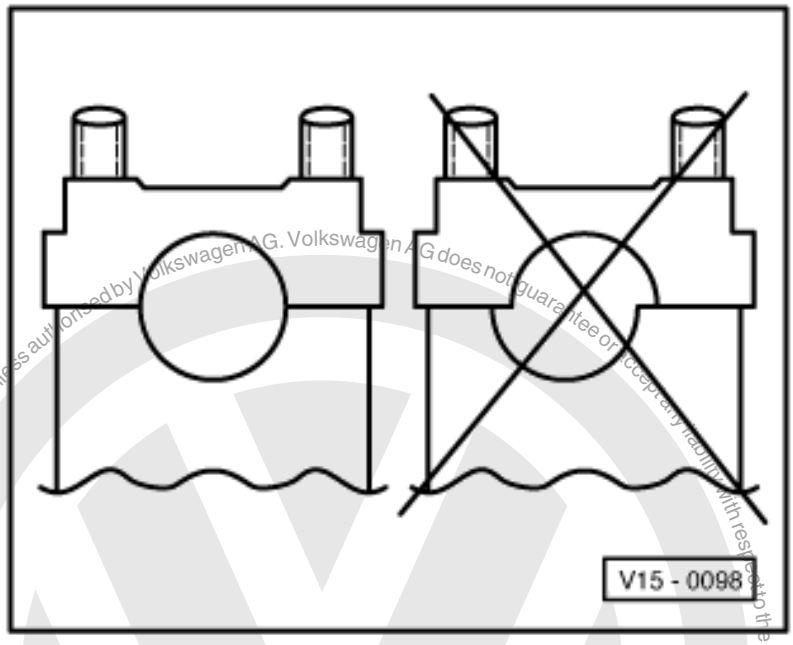

- -> When installing the bearing cap note offset, before installing camshaft fit bearing caps and determine fitting position.

- Oil camshaft running surfaces.

Engine code AFT

- Tighten bearing caps 2 and 4 alternately and diagonally to
  20 Nm.
- Coat bearing cap 1 contact surface lightly with sealant AMV 174 004 01.
- Install bearing caps 1, 3 and 5 and also tighten to
  20 Nm.

Engine code letters 1F, ADZ

- Tighten bearing caps 2 and 5 alternately and diagonally to
  20 Nm.
- Coat bearing cap 1 contact surface lightly with sealant AMV 174 004 01.
- Install bearing caps 1 and 3 and also tighten to
  20 Nm.

Continued for all engine codes

- Install camshaft sprocket and tighten to
  80 Nm
  (counter-hold with 3036).
- Install and tension toothed belt (adjusting valve timing)

Protected by copyright. Copyright by Volkswagen AG. Volkswagen AG does not guarantee or accept any liability with respect to the correctness of information in this document. Copyright by Volkswagen AG. Protected by copyright. Copying for private or commercial purposes, in part or in whole, is not permitted unless authorised by Volkswagen AG.
satelettronica

=> Page 24 .

Note:

When new tappets have been installed the engine must not be started for about 30 minutes. Hydraulic compensation elements must settle (otherwise valves will strike pistons).

2.5 - Checking hydraulic bucket tappets

Special tools, testers and auxiliary items

- Feeler gauge
- Wood or plastic wedge

Notes:

- Renew defective tappet complete (cannot be adjusted or repaired).
- Irregular valve noises when starting engine are normal.

Test sequence

- Start engine and run until the radiator fan has switched on once.
- Increase engine speed to about 2500 rpm for 2 minutes.

If the hydraulic tappets are still noisy, locate defective tappets as follows:

Engine code AFT:

- Remove intake manifold upper part.

- Remove cylinder head cover.
- Rotate crankshaft clockwise on toothed belt sprocket securing bolt, until cam of the tappet to be checked is pointing upwards.
- Determine play between cam and bucket tappet.
- If the play is in excess of 0.2 mm, renew bucket tappet. If the play is less than 0.1 mm or no play, proceed with check as follows:

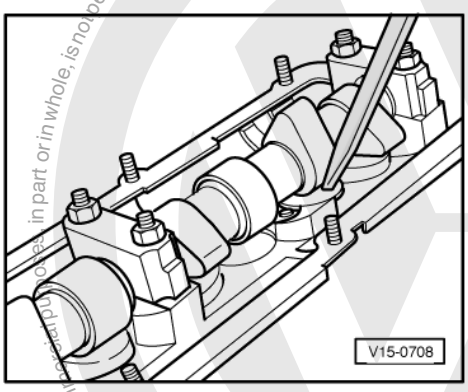

- -> Press bucket tappet down with a wooden or plastic wedge. If free travel in excess of 0.2 mm is felt before tappet opens valve, renew tappet.

Note:

After installing new tappets the engine must not be started for approx. 30 minutes. Hydraulic compensation elements must settle (otherwise valves will strike pistons).

satelettronica

2.6 - Checking valve guides

Special tools, testers and auxiliary items

- VW 387 Universal dial gauge bracket
- Dial gauge

Test sequence

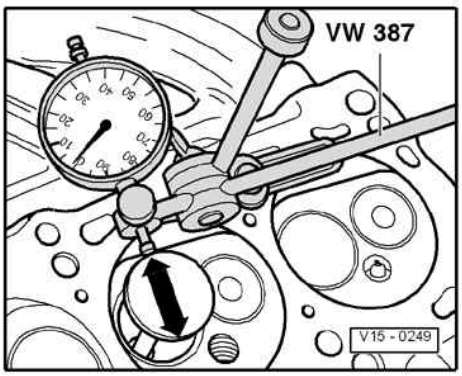

- -> Insert new valve into guide until end of valve stem is flush with end of guide. Due to the slight difference in stem dimensions, ensure that only an inlet valve is used in the inlet guide and an exhaust valve in the exhaust guide.
- Determine rock.
  Wear limit:
  Inlet valve guide = 1.0 mm
  Exhaust valve guide = 1.3 mm

2.7 - Renewing valve guides

Special tools, testers and auxiliary items

Engine code 1F

- Drift 10-206
- Hand reamer 10-215 and cutting fluid

Engine code AFT, ADZ

- Drift 3121
- Hand reamer 3120 and cutting fluid

Work sequence

- Clean and check cylinder head. Cylinder heads in which the valve seats can no longer be reworked, or cylinder heads which have already been machined to the minimum dimension, should not have the valve guides replaced.

Note:

When the shoulder on guide makes contact, the pressure must not exceed 1.0 t otherwise shoulder may break off.

Engine code 1F

- Press out worn valve guides with 10-206 as follows:
  - Valve guides without shoulder from the camshaft side
  - Valve guides with shoulder (repair version) from the combustion chamber side

Protected by copyright. Copyright by Volkswagen AG. Copying for private or commercial purposes, in part or in whole, is not permitted unless authorised by Volkswagen AG. Volkswagen AG does not guarantee or accept any liability with respect to the correctness of information in this document.
satelettronica

- Coat new guides with oil and press in with 10-206 from the camshaft side (cylinder head cold) until shoulder makes contact.
- Ream guides out with hand reamer 10-215 using plenty of cutting fluid.

Engine code AFT, ADZ

- Press out worn valve guide with 3121 as follows:
  - Valve guides without shoulder from the camshaft side
  - Valve guides with shoulder (repair version) from the combustion chamber side
- Coat new guides with oil and press in with 3121 from the camshaft side (cylinder head cold) until shoulder makes contact.
- Ream guides out with hand reamer 3120 using plenty of cutting fluid.

Continued for all engine codes

- Rework valve seats => Page 65 .

2.8 - Renewing valve stem seals

(with cylinder head fitted)

Special tools, testers and auxiliary items

- Spark plug key 3122B
- Puller 3047A
- Assembly tool 2036
- Pressure hose VW 653/3
- Lever VW 541/1A with press piece VW 541/5

Engine code AFT, ADZ

- Fitting tool 3129

Engine code 1F

- Fitting tool 3129

Removing

- Remove camshaft => Page 68 .
- Remove bucket tappets (do not interchange) and store with the contact surface downwards.
- Remove spark plugs.

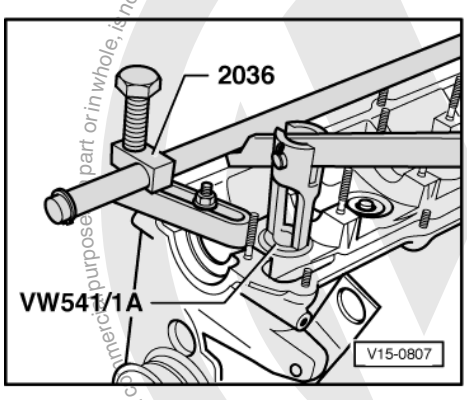

- Set piston of appropriate cylinder to "bottom dead centre".
- -> Fit assembly tool 2036 and adjust mountings to height of studs.
- Screw compressed air hose VW 653/3 into spark plug thread and apply a continuous pressure of min. 6 bar.

satelettronica
Protected by copyright. Copyright by Volkswagen AG. Volkswagen AG does not guarantee or accept any liability with respect to the correctness of information in this document. Copyright by Volkswagen AG. Commercial purposes part or in whole, is not permitted unless authorised by Volkswagen AG.

- Remove valve springs with lever VW 541/1A and press piece VW 541/5.

Note:

Tight cotters can be loosened by tapping lightly on the lever.

- Pull off valve stem seals with 3047A.

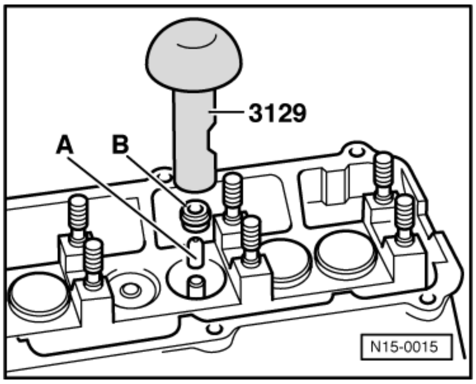

Installing

Engine code AFT, ADZ

- -> To prevent damage to the new valve stem seals, place plastic sleeve -A- on valve shaft.
- Oil valve stem seal -B-, place it in the tool 3129 and push carefully onto the valve guide.

Engine code 1F

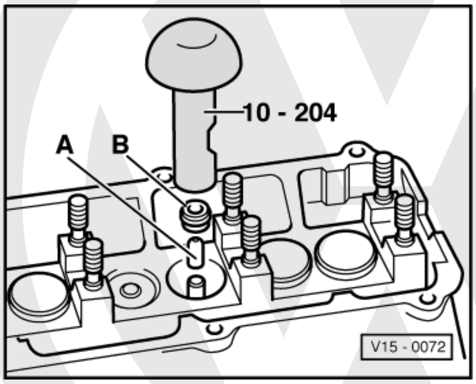

- -> To prevent damage to the new valve stem seals, place plastic sleeve -A- on valve shaft.
- Oil valve stem seal -B-, place it in the tool 10-204 and push carefully onto the valve guide.

Protected by copyright. Copying for private or commercial purposes, in part or in whole, is not permitted unless authorised by Volkswagen AG. Volkswagen AG does not guarantee or accept any liability with respect to the correctness of information in this document. Copyright by Volkswagen AG.

satelettronica

17 - Lubrication

1 - Removing and installing parts of the lubrication system

1.1 - Removing and installing parts of the lubrication system

Notes:

- If when repairing an engine, metal shavings or a large quantity of small metal particles are found, this could indicate that the crankshaft and conrod bearings are damaged. To prevent consequential damage perform the following repairs:
  - Thoroughly clean oil passages
  - Replace oil spray jets
  - Replace oil cooler
  - Replace oil filter
- The oil level must not be above the max. mark - danger of damage to catalyst!

Checking oil pressure => Page 81

Oil system capacity1):

without oil filter 3.3 ltrs.
with oil filter 3.8 ltrs.

1) Up-to-date figures:

=> Exhaust emissions test binder

Engine oil specifications:

Use engine oils to VW standard 500 00, 501 01 or 502 00. Only in exceptional cases: Multi-grade oils corresponding to ACEA A2/A3.

Protected by copyright. Copying for private or commercial purposes, in part or in whole, is not permitted unless authorised by Volkswagen AG. Volkswagen AG does not guarantee or accept any liability with respect to the correctness of information in this document. Copyright by Volkswagen AG.

satelettronica

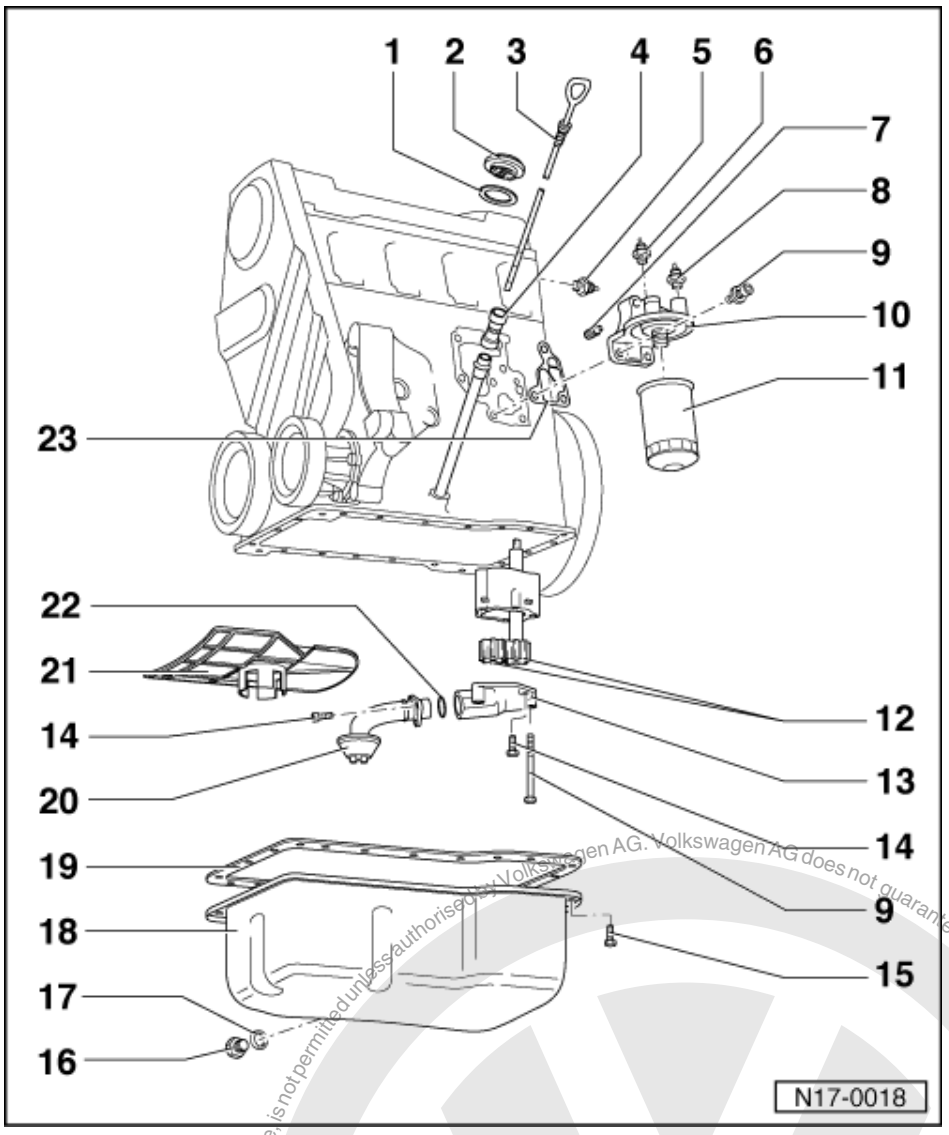

1 Seal
- Renew if damaged

2 Cap

3 Dipstick
- The oil level must not be above the max. mark!
- Area above shaded zone up to max. mark: Do not top up with engine oil!
- Oil level in shaded zone: Engine oil can be topped up
- Area min. mark up to shaded zone: Top-up engine oil

4 Guide
- Pull off to extract oil

Protected by copyright. Copying for private or commercial purposes, in part or in whole, is not permitted unless authorised by Volkswagen AG. Volkswagen AG does not guarantee or accept any liability with respect to the correctness of information in this document. Copyright by Volkswagen AG.
satelettronica

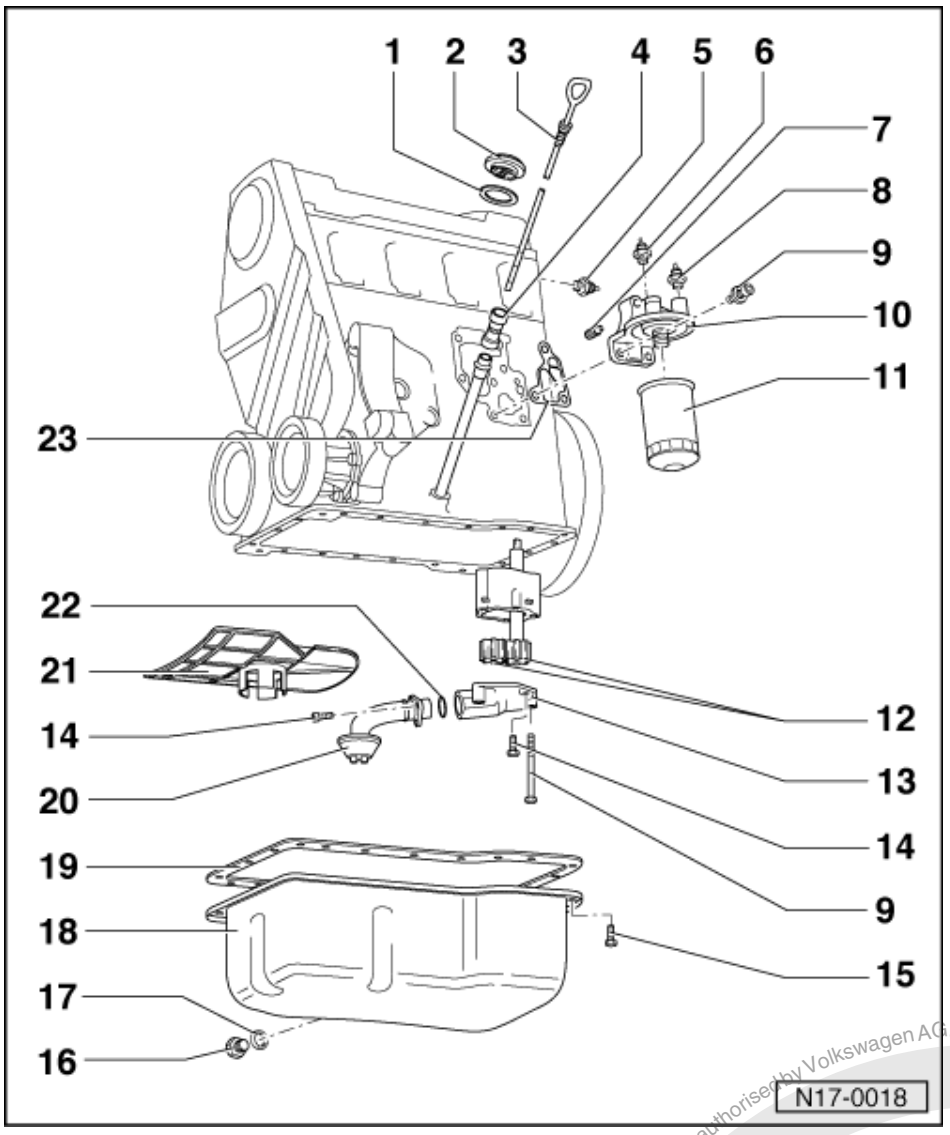

5 0.25 bar oil pressure switch (F22), 25 Nm
- Only engine code AFT and ADZ
- Blue
- Checking => Page 81
- If sealing ring is leaking nip open and replace.

6 1,8 bar oil pressure switch (F1), 25 Nm
- White
- Checking => Page 81
- If sealing ring is leaking nip open and replace.

7 Non-return valve, 5 Nm

8 0,3 bar oil pressure switch (F22), 25 Nm
- Engine code 1F only
- Brown
- Checking => Page 81
- If sealing ring is leaking nip open and replace.

Protected by copyright. Copying for private or commercial purposes, in part or whole, is not permitted unless authorised by Volkswagen AG. Volkswagen AG does not guarantee or accept any liability with respect to the correctness of information in this document. Copyright by Volkswagen AG.
satelettronica

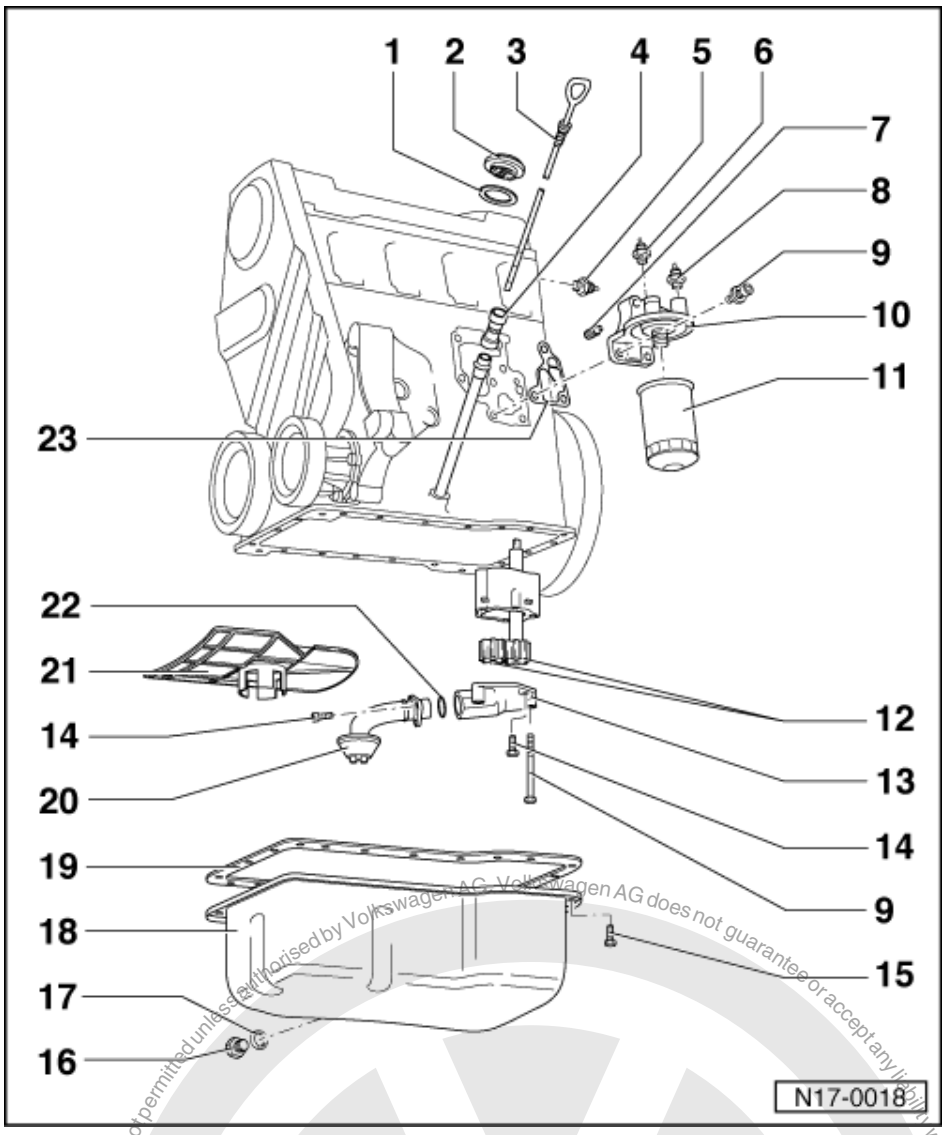

9 20 Nm

10 Oil filter bracket

11 Oil filter

- Loosen with strap wrench
- Tighten by hand
- Observe installation instructions on oil filter

12 Gears

- Checking backlash
  => Fig. 1
- Checking axial clearance
  => Fig. 2

13 Oil pump cover with pressure relief valve

- Opening pressure: 5.7...6.7 bar

14 10 Nm

15 20 Nm

- Only loosen and tighten the bolts flywheel end with jointed wrench 3185

satelettronica
Protected by copyright. Copyright by Volkswagen AG.

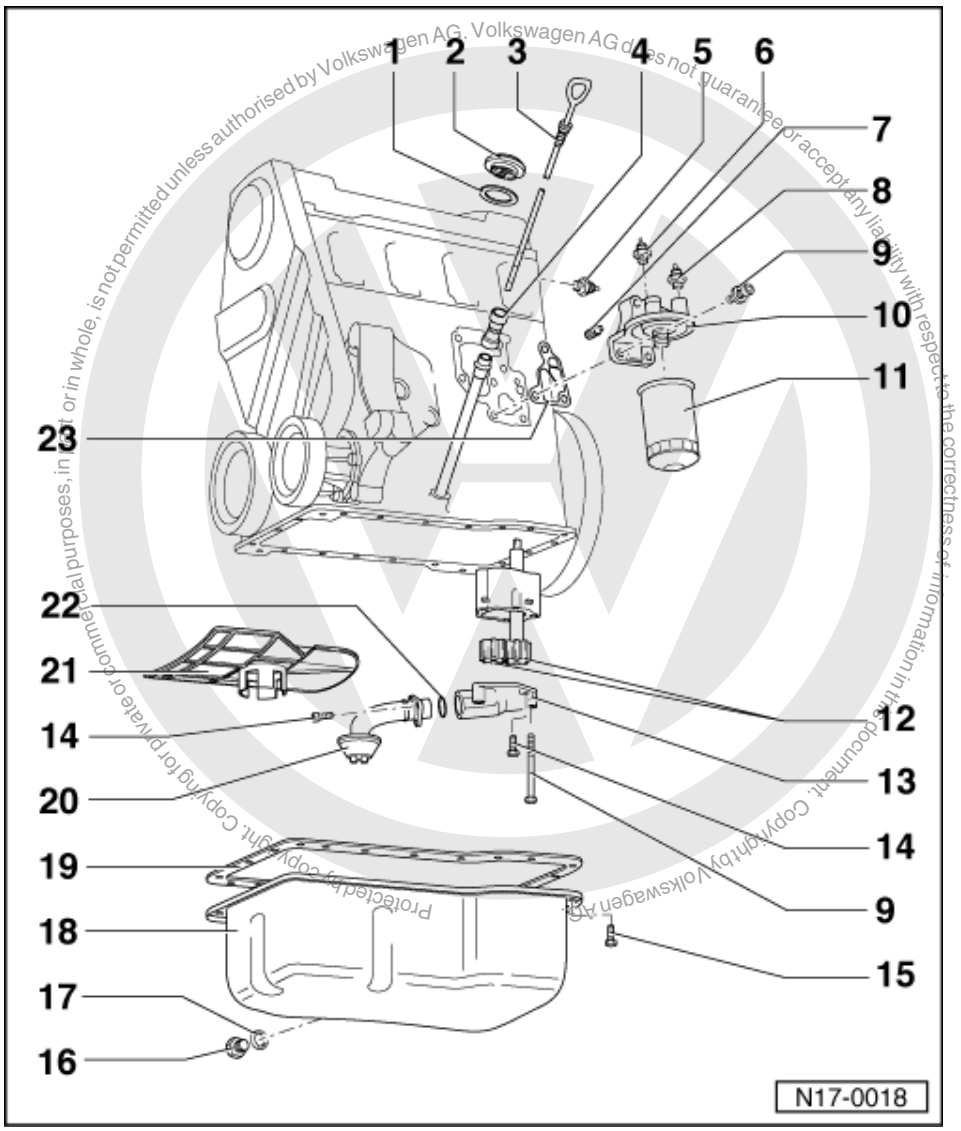

16 Oil drain plug, 30 Nm

17 Seal

- Renew

18 Sump

- Clean sealing surface before installing

19 Gasket

- Renew
- Before fitting gasket coat sump flange/cylinder block flange with "D 454 300 A2"

20 Suction pipe

- Clean strainer if soiled

21 Baffle plate

- To remove, remove oil pump cover or suction pipe

satelettronica

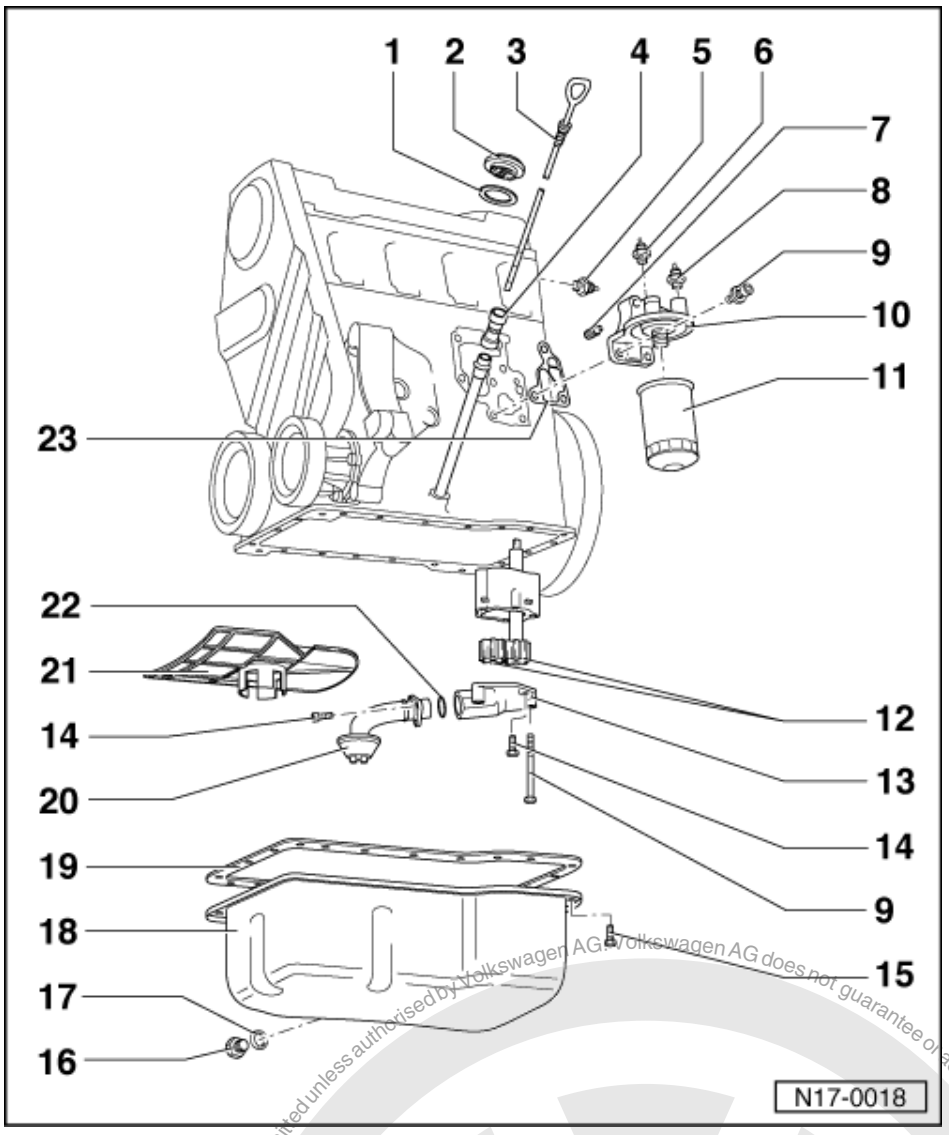

22 O-ring
- Renew if damaged

23 Gasket
- Renew

Protected by copyright. Copying for private or commercial purposes, in part or in whole, is not permitted unless authorised by Volkswagen AG. Volkswagen AG does not guarantee or accept any liability with respect to the correctness of information in this document. Copyright by Volkswagen AG.
satelettronica

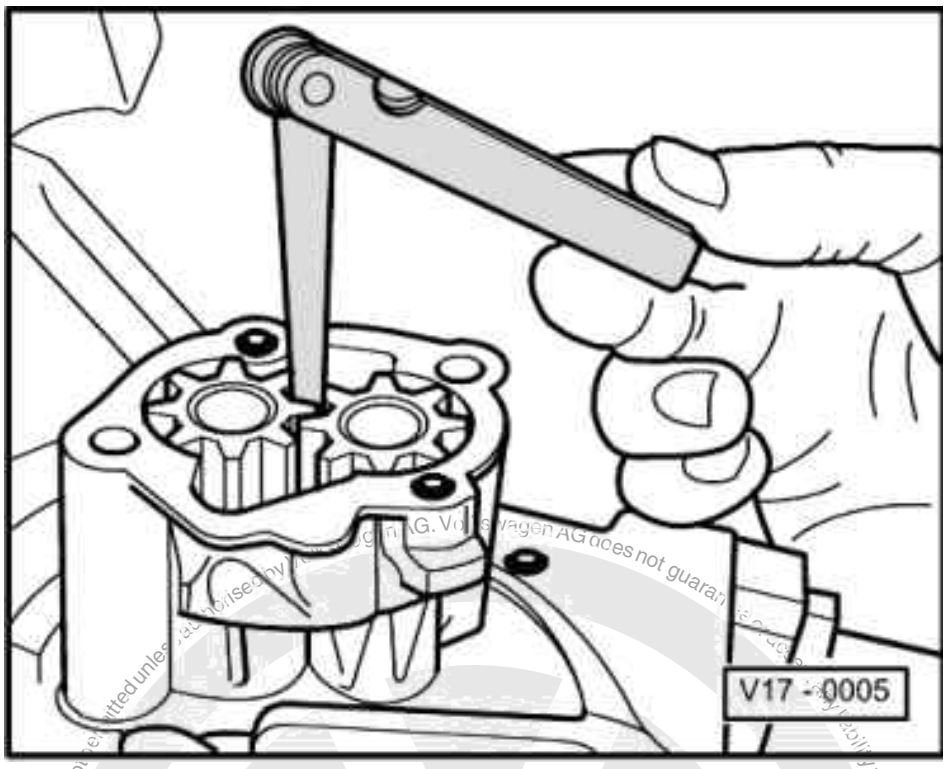

-> Fig. 1 Checking oil pump backlash

New: 0.05 mm

Wear limit: 0.20 mm

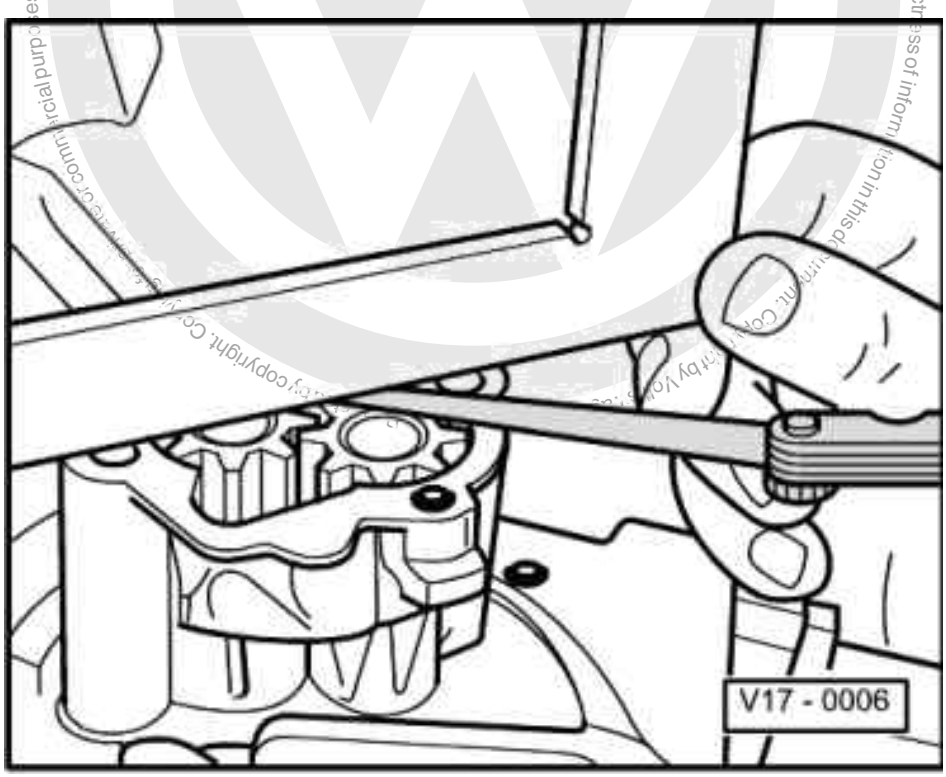

satelettronica

-> Fig. 2 Checking oil pump axial clearance

Wear limit: 0.15 mm

1.2 - Checking oil pressure and oil pressure switch

Special tools, testers and auxiliary items

- Oil pressure tester V.A.G 1342
- Diode test lamp V.A.G 1527
- Adapter set V.A.G 1594

Note:

Functional check and servicing the optical and acoustic oil pressure warning:

=> Current flow diagrams, Electrical fault finding and Fitting locations binder

Test sequence

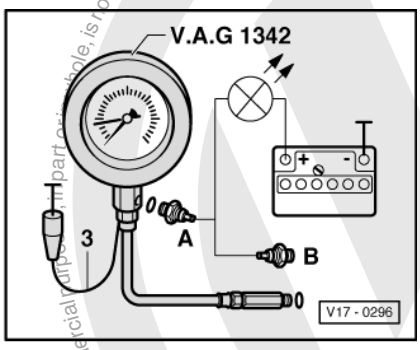

- -> Remove 0.3 bar oil pressure switch (brown insulation) or 0.25 bar oil pressure switch (blue insulation) and screw into the tester.
- Screw tester into the cylinder head or oil filter bracket in place of the oil pressure switch.
- Connect brown wire -3- of tester to earth (-).

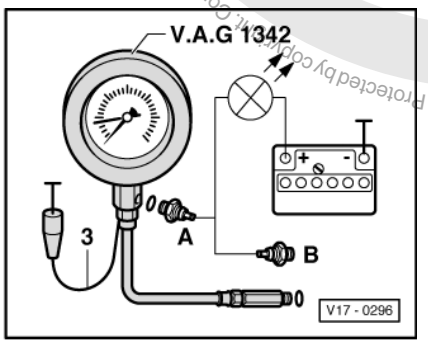

- -> Connect diode test lamp V.A.G 1527 with aux. cables from V.A.G 1594 to battery positive (+) and 0.3 bar or 0.25 bar oil pressure switch (F22) -A-. LED must light up.
- Start engine and increase speed slowly.
  At
  brown switch: 0.15...0.45 bar
  blue switch: 0.15...0.35 bar
  the LED must go out, otherwise renew oil pressure switch.
- Connect diode test lamp to 1.8 bar oil pressure switch (white insulation) -B-.
  At

Protected by copyright. Copyright by Volkswagen AG.
Non-commercial copies, in part or in whole, is not permitted unless authorised by Volkswagen AG. Volkswagen AG does not guarantee or accept any liability with respect to the correctness of information in this document.
satelettronica

1.6...2.0 bar
The LED must light up, otherwise renew oil pressure switch.
- Increase engine speed further.
At 2000 rpm and an oil temperature of 80 °C the oil pressure should be at least 2.0 bar.

At higher engine speed the oil pressure must not exceed 7.0 bar. If necessary renew oil pump cover with pressure relief valve.

Protected by copyright. Copying for private or commercial purposes, in part or in whole, is not permitted unless authorised by Volkswagen AG. Volkswagen AG does not guarantee or accept any liability with respect to the correctness of information in this document. Copyright by Volkswagen AG.
satelettronica

19 - Cooling system

1 - Removing and installing parts of cooling system

1.1 - Removing and installing parts of cooling system

Notes:

- When the engine is warm the cooling system is under pressure. If necessary release pressure before commencing repair work.
- Hoses are secured with spring-type clips or screw-type clips. In cases of repair spring-type clips can be replaced by screw-type clips.
- Assembly tool VAS 5024 or hose clip pliers V.A.G 1921 are recommended for fitting spring-type clips.

Draining and filling with coolant=> Page 95

Coolant mixture ratios => Page 95 , draining and filling with coolant

Carry out cooling system leakage check with V.A.G 1274 and 1274/3.

Protected by copyright. Copying for private or commercial purposes, in part or in whole, is not permitted unless authorised by Volkswagen AG. Volkswagen AG does not guarantee or accept any liability with respect to the correctness of information in this document. Copyright by Volkswagen AG.

satelettronica

1.2 - Parts of cooling system body side

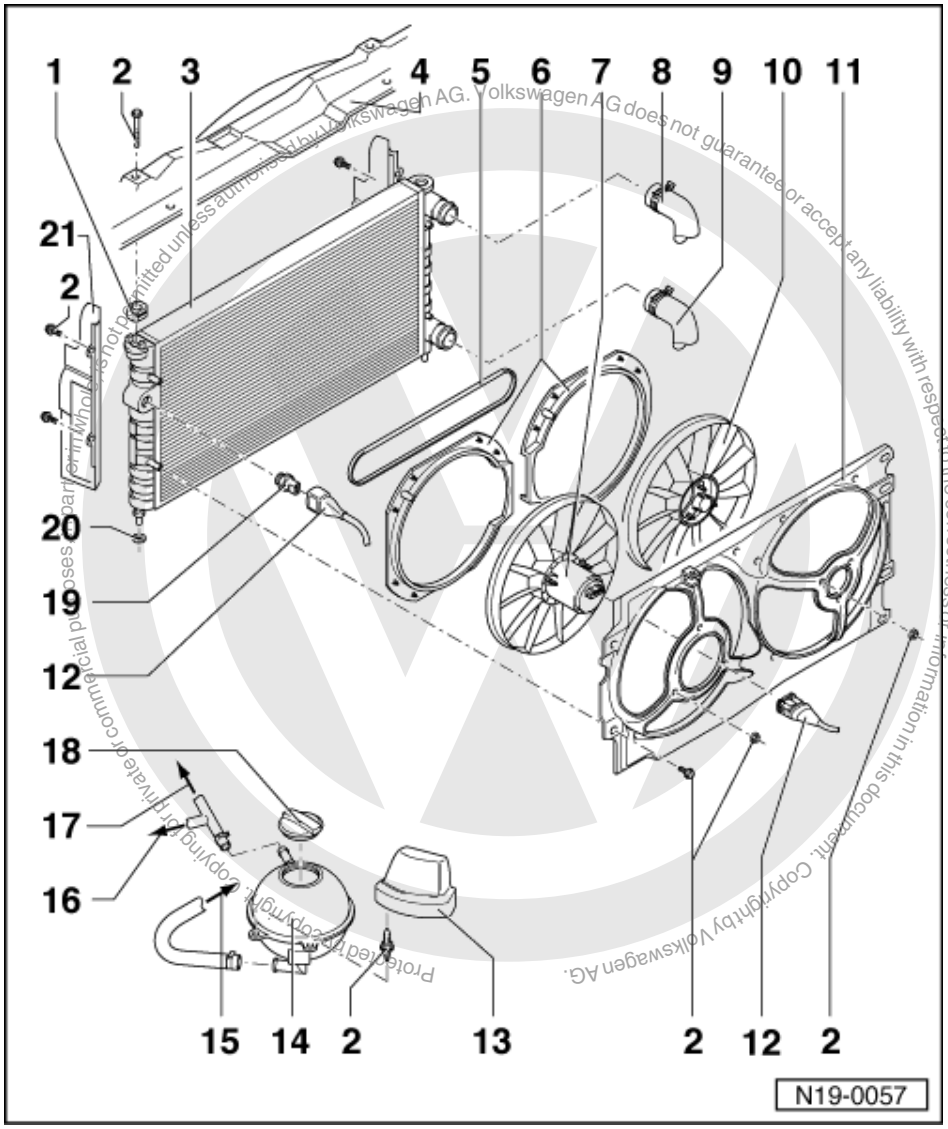

1 Clamp
2 10 Nm
3 Radiator
- Removing and installing
  =>Page 97
- After replacing renew entire coolant

4 Lock carrier
5 V-belt
- Only with optional extras

6 Guide ring
- Note fitting position
- Secured on fan ring item 11 with clips

7 Radiator fan
- Removing and installing
  =>Page 97

satelettronica

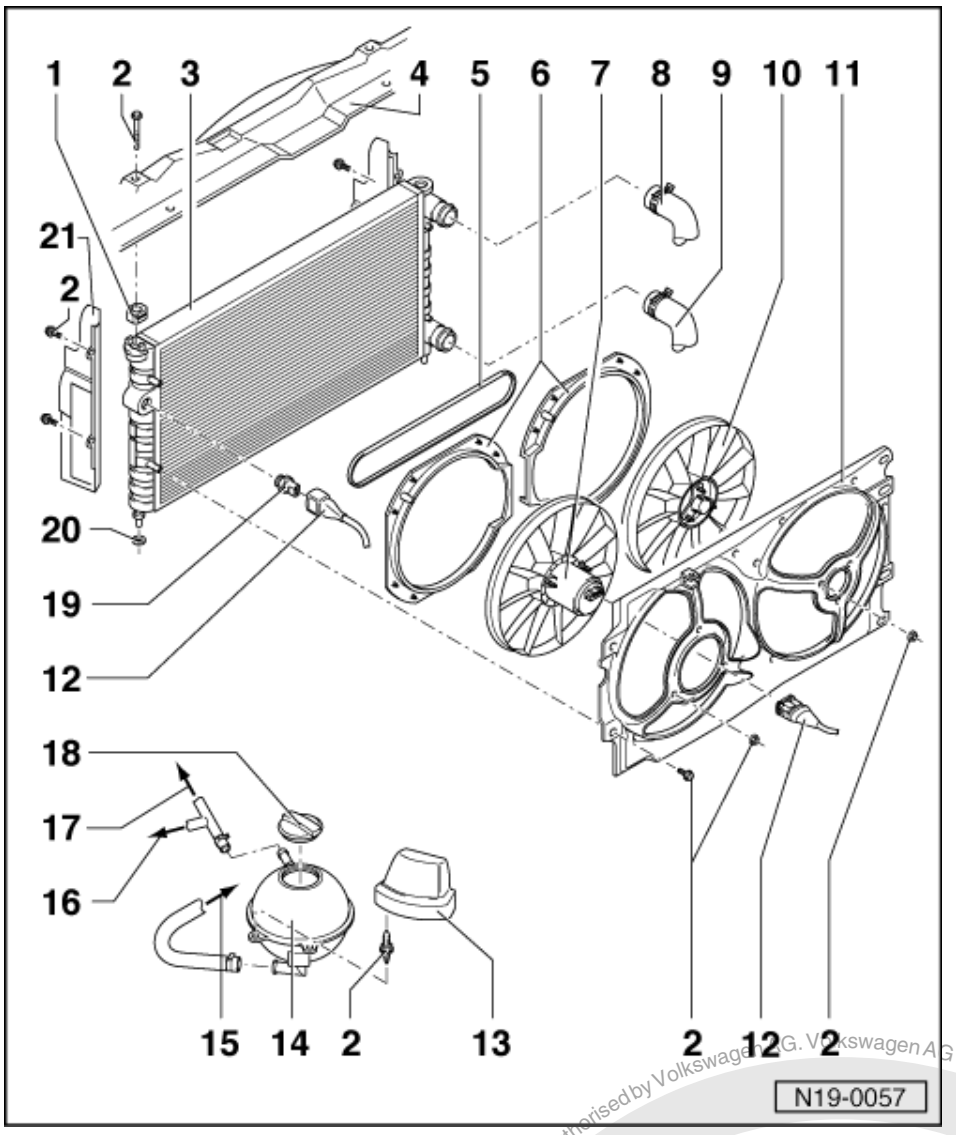

8 Upper coolant hose
- To connection
  =>Page 92 , item 18

9 Lower coolant hose
- To coolant pump
  =>Page 88 , Item 15

10 Additional fan
- Only with optional extras
- Removing and installing
  =>Page 97

11 Fan ring

12 Connector

13 Cover

14 Expansion tank

15 To coolant pipe
- =>Page 87 , Item 8
- On automatic gearbox:
  To radiator for automatic gearbox

satelettronica
Protected by copyright. Copyright for private and commercial purposes, in part or in whole, is not permitted unless authorised by Volkswagen AG. Volkswagen AG does not guarantee or accept any liability with respect to the correctness of information in this document. Copyright by Volkswagen AG.

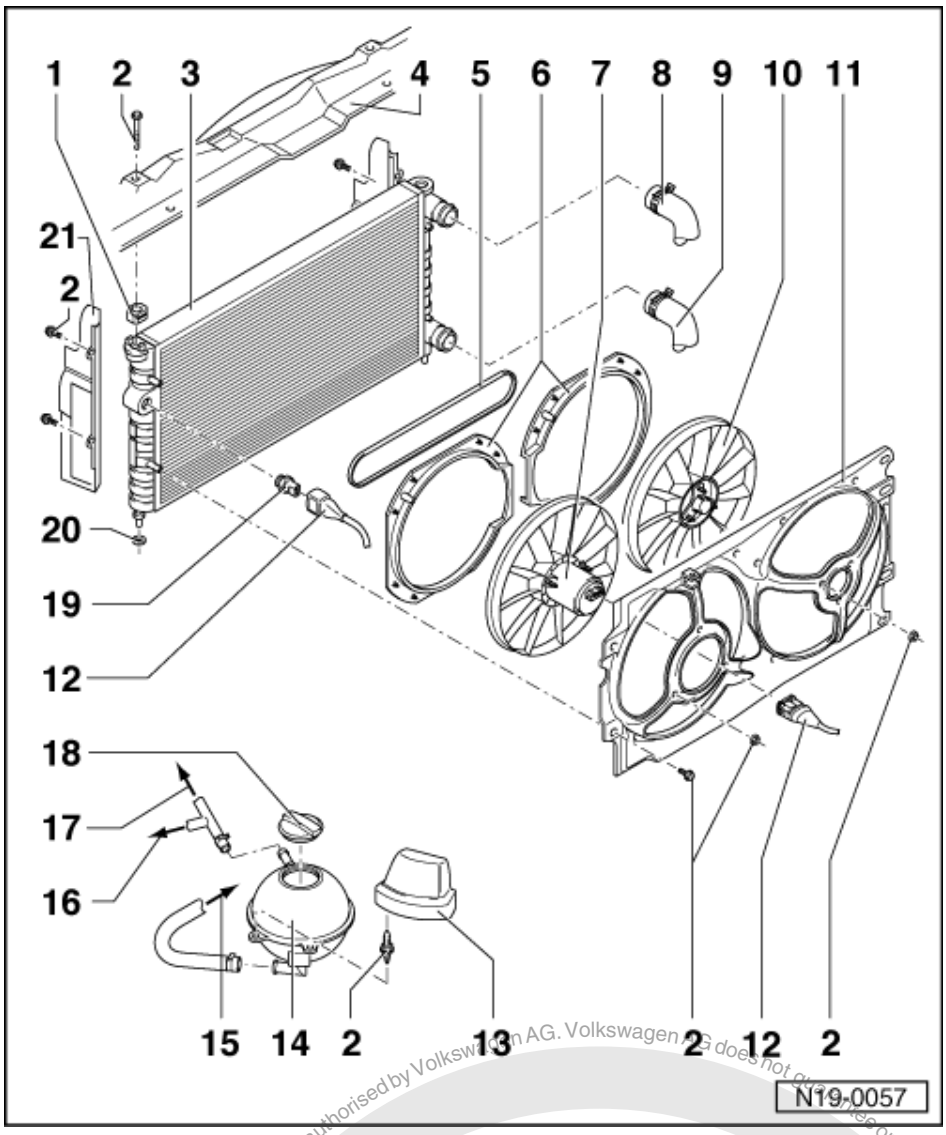

16 From the throttle valve control part
- Engine code AFT only

17 To connection
- =>Page 91, Item 11

18 Cap
- Check with V.A.G 1274 and 1274/4
- Test pressure 1.3...1.5 bar

19 Thermo-switch (F18), 35 Nm
- For electric fan
- Switching temperatures:
  Stage 1
  on: 92...97 °C
  off: 84...91 °C
  Stage 2
  on: 99...105 °C
  off: 91...98 °C

20 Rubber washer

21 Air ducting

satelettronica
Protected by copyright. Copying for private or commercial purposes not permitted without authorised by Volkswagen AG. Volkswagen AG does not give any guarantee or accept any liability with respect to the correctness of information in this document. Copyright by Volkswagen AG.

1.3 - Parts of cooling system - engine side

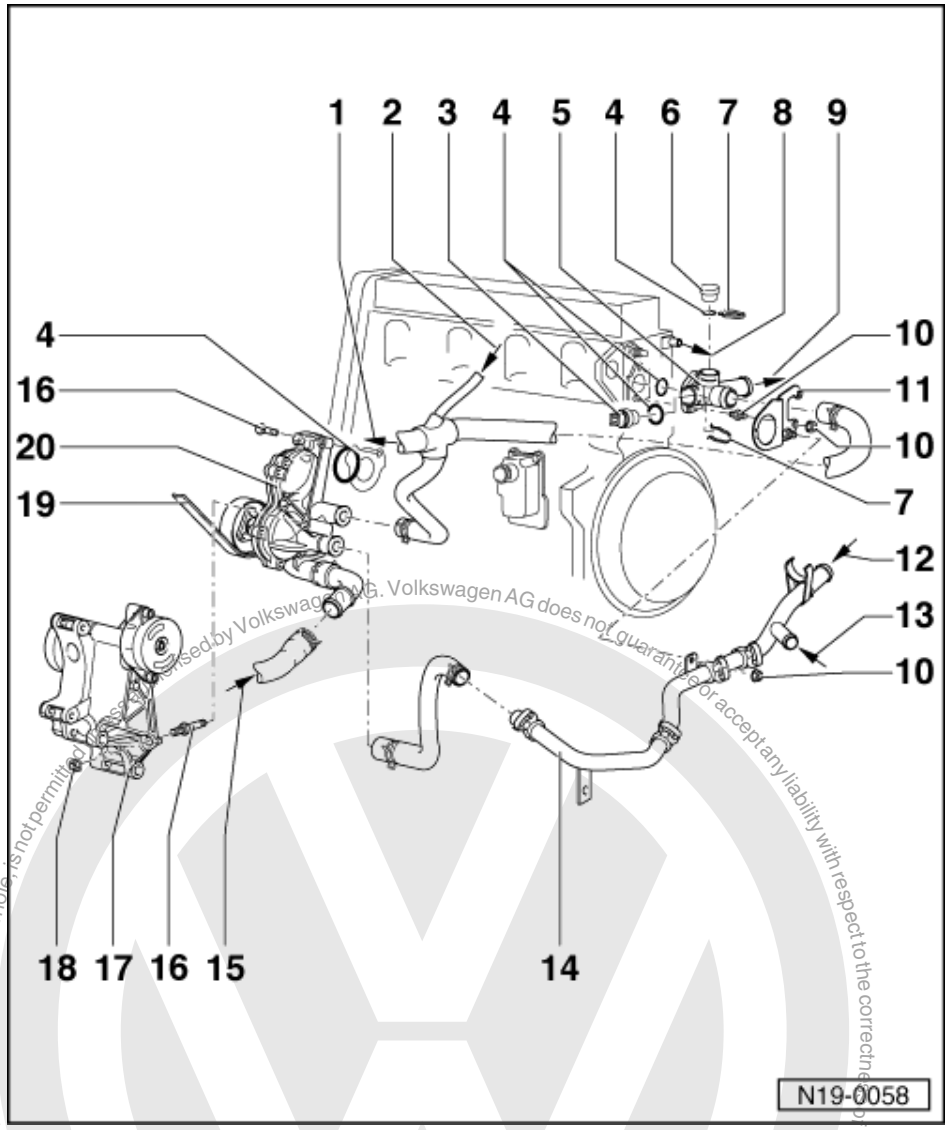

Engine code AFT

1 To top of radiator
- =>Page 85 , Item 8

2 From expansion tank
- =>Page 86 , Item 17

3 Coolant temperature sender (G62)
- With coolant temperature gauge sender (G2)

4 O-ring
- Renew if damaged

5 Branch connection

6 Plug

7 Retaining clip

Protected by copyright. Copyright by Volkswagen AG.
Reproduced by Volkswagen AG. Volkswagen AG does not guarantee or accept any liability with respect to the correctness of information in this document.
Copyright by Volkswagen AG. Not permitted for commercial purposes, in part or in whole, is not permitted.
satelettronica

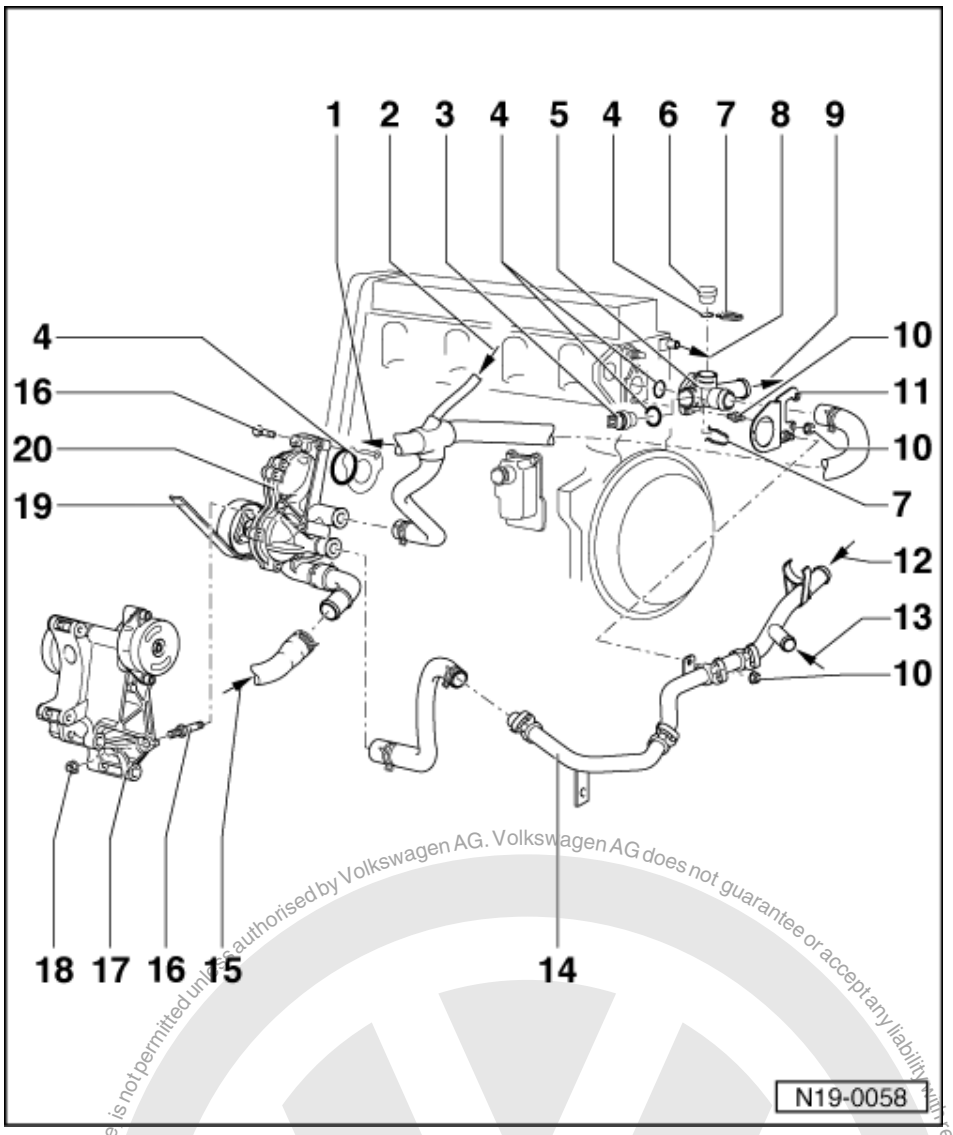

8 To throttle valve control part
9 To heat exchanger
10 10 Nm
11 Bracket
12 From heat exchanger
13 From expansion tank
- =>Page 85 , Item 15

14 Coolant pipe
15 From bottom of radiator
- =>Page 85 , Item 9

16 20 Nm + 1/4 turn (90 °) further
- Renew

17 Bracket
- For alternator

Protected by copyright. Copyright by Volkswagen AG.
Copyright by Volkswagen AG. Volkswagen AG does not guarantee or accept any liability with respect to the correctness of information in this document.
Distribution to third parties and any other use of this document is not permitted unless authorised by Volkswagen AG.
satelettronica

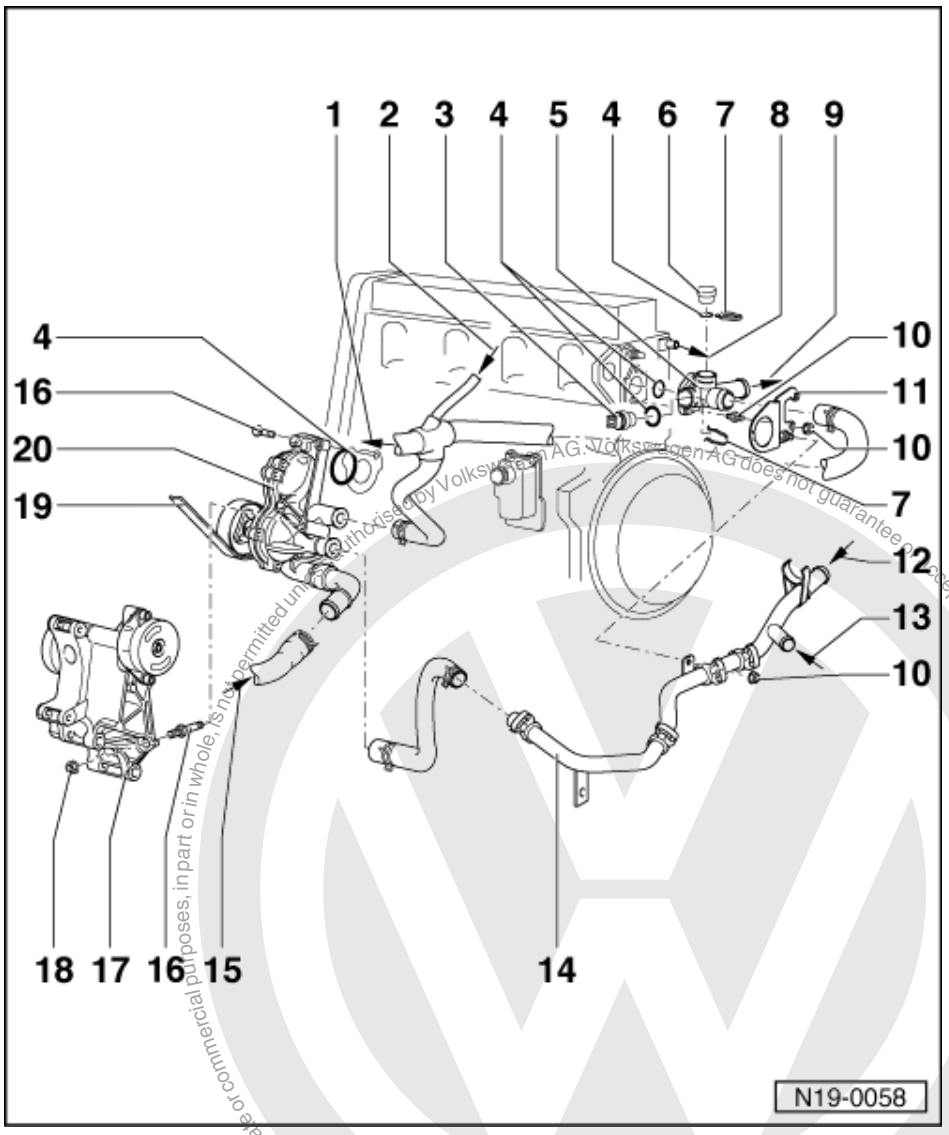

18 30 Nm

19 V-belt/ribbed belt

- Removing and installing ribbed belt => Page 21
- Adjusting V-belt tension:

=> Running gear; Repair group 48; Assembly overview: vane pump, reservoir and hydraulic pipes Assembly overview: vane pump, reservoir and hydraulic pipes

20 Coolant pump

- Dismantling and assembling => Page 93

satelettronica

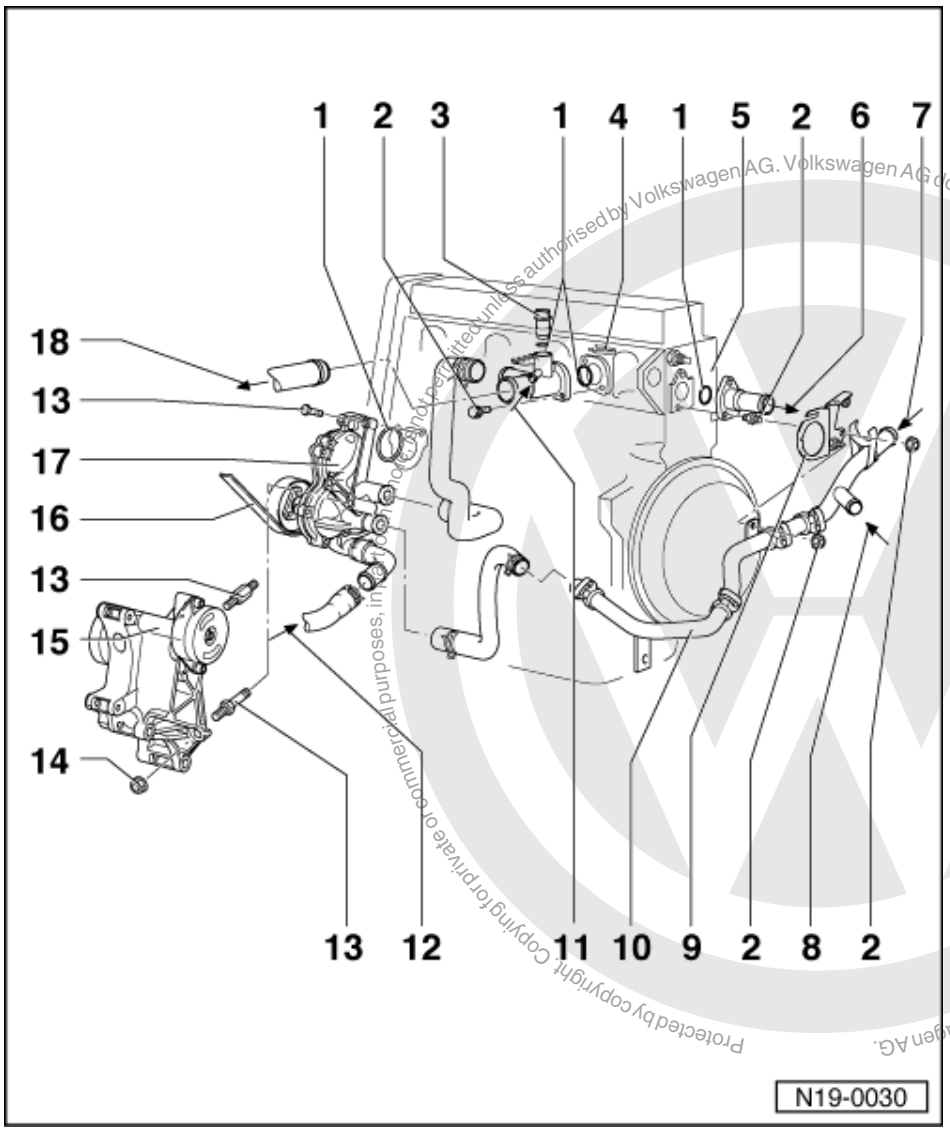

Protected by copyright. Copying for private or commercial purposes, in part or in whole, is not permitted unless authorised by Volkswagen AG. Volkswagen AG does not guarantee or accept any liability with respect to the correctness of information in this document. Copyright by Volkswagen AG.

satelettronica

Engine code 1F, ADZ

1 O ring
- Renew if damaged

2 10 Nm

3 Coolant temperature sender (G62)
- With coolant temperature gauge sender (G2)

4 Retaining clip

5 Cylinder head

6 To heat exchanger
- On automatic gearbox:
  In addition to radiator for automatic gearbox

7 From heat exchanger

8 From expansion tank
- =>Page 85 , Item 15

9 Bracket

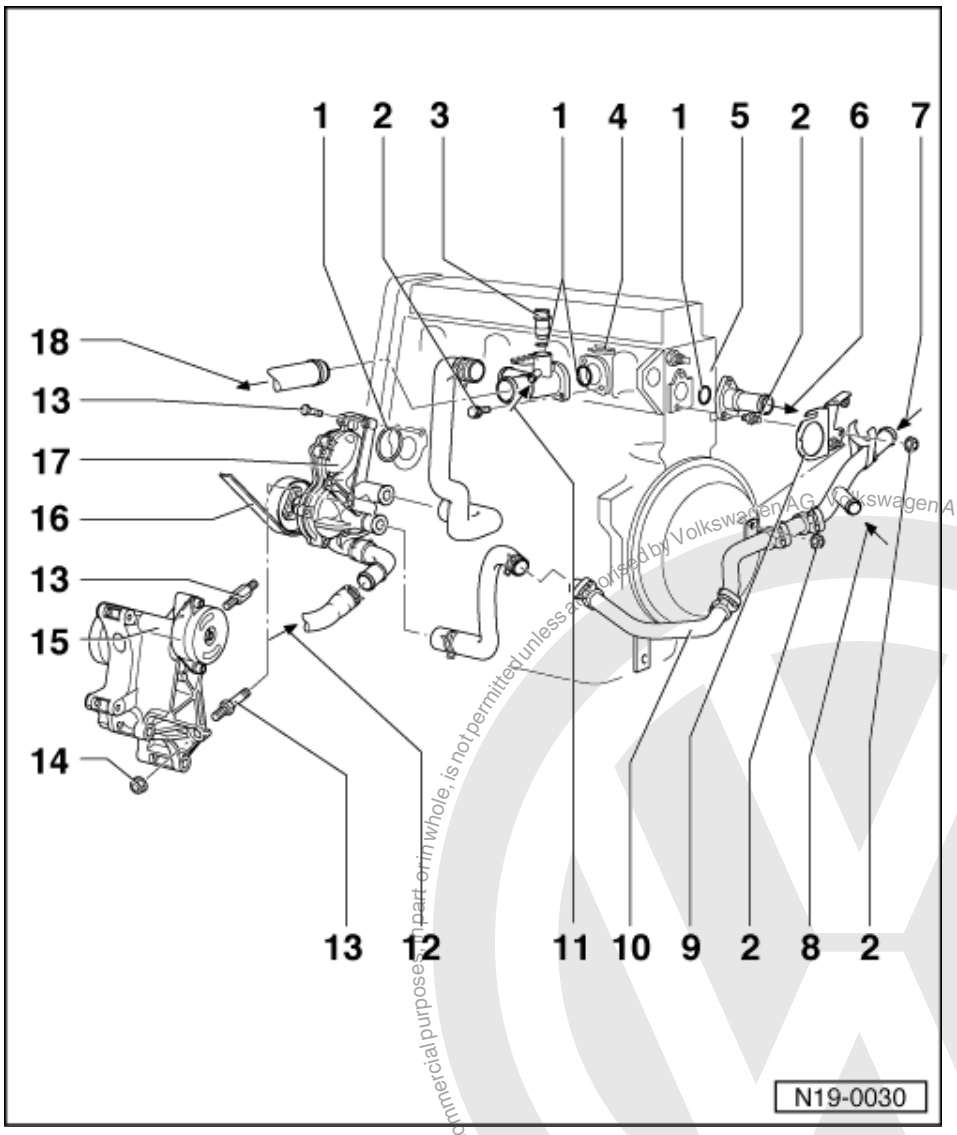

10 Coolant pipe
11 From expansion tank
- =>Page 86 , Item 17

12 From bottom of radiator
- =>Page 85 , Item 9

13 20 Nm + 1/4 turn (90 °) further
- Renew

14 30 Nm
15 Bracket
- For alternator

16 V-belt/ribbed belt
- Removing and installing ribbed belt => Page 21
- Adjusting V-belt tension:

=> Running gear; Repair group 48; Assembly overview: vane pump, reservoir and hydraulic pipes Assembly overview: vane pump, reservoir and hydraulic pipes

Protected by copyright. Copying for private or commercial purposes, in part or in whole, is not permitted unless authorised by Volkswagen AG. Volkswagen AG does not guarantee or accept any liability with respect to the correctness of information in this document. Copyright by Volkswagen AG.
satelettronica

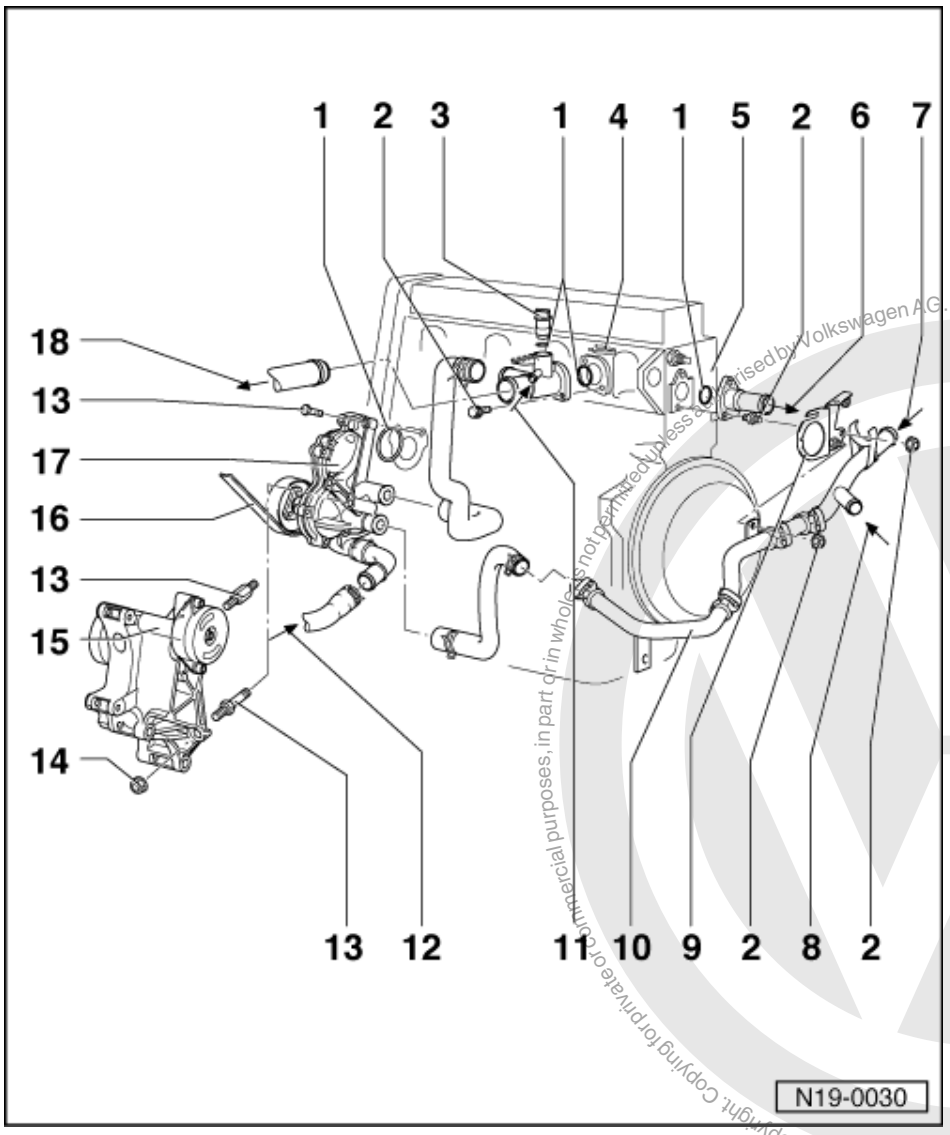

17 Coolant pump

- Dismantling and assembling => Page 93

18 To top of radiator

- =>Page 85 , Item 8

Protected by copyright. Copying for private or commercial purposes, in part or in whole, is not permitted unless authorised by Volkswagen AG. Volkswagen AG does not guarantee or accept any liability with respect to the correctness of information in this document. Copyright by Volkswagen AG.
satelettronica

1.4 - Dismantling and assembling coolant pump

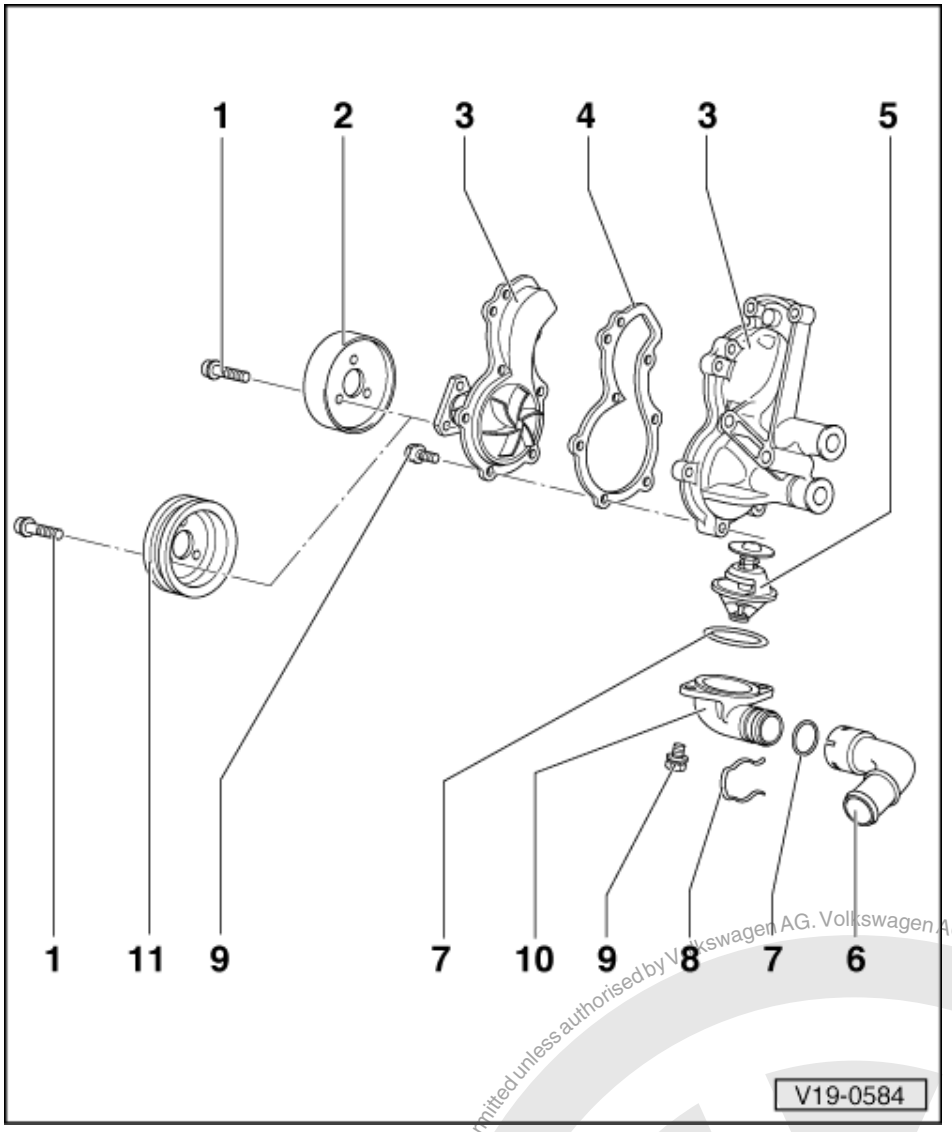

1 25 Nm
2 Belt pulley
- Version for ribbed belt

3 Coolant pump
- Check for ease of movement

4 Gasket
- Renew

5 Coolant thermostat
- Checking: heat-up thermostat in water
- Opening commences approx. 87 °C
- Ends approx. 102 °C
- Opening lift min. 7 mm

6 Connection

Protected by copyright. Copying for private or commercial purposes, in part or in whole, is not permitted unless authorised by Volkswagen AG. Volkswagen AG does not guarantee or accept any liability with respect to the correctness of information in this document. Copyright by Volkswagen AG.
satelettronica

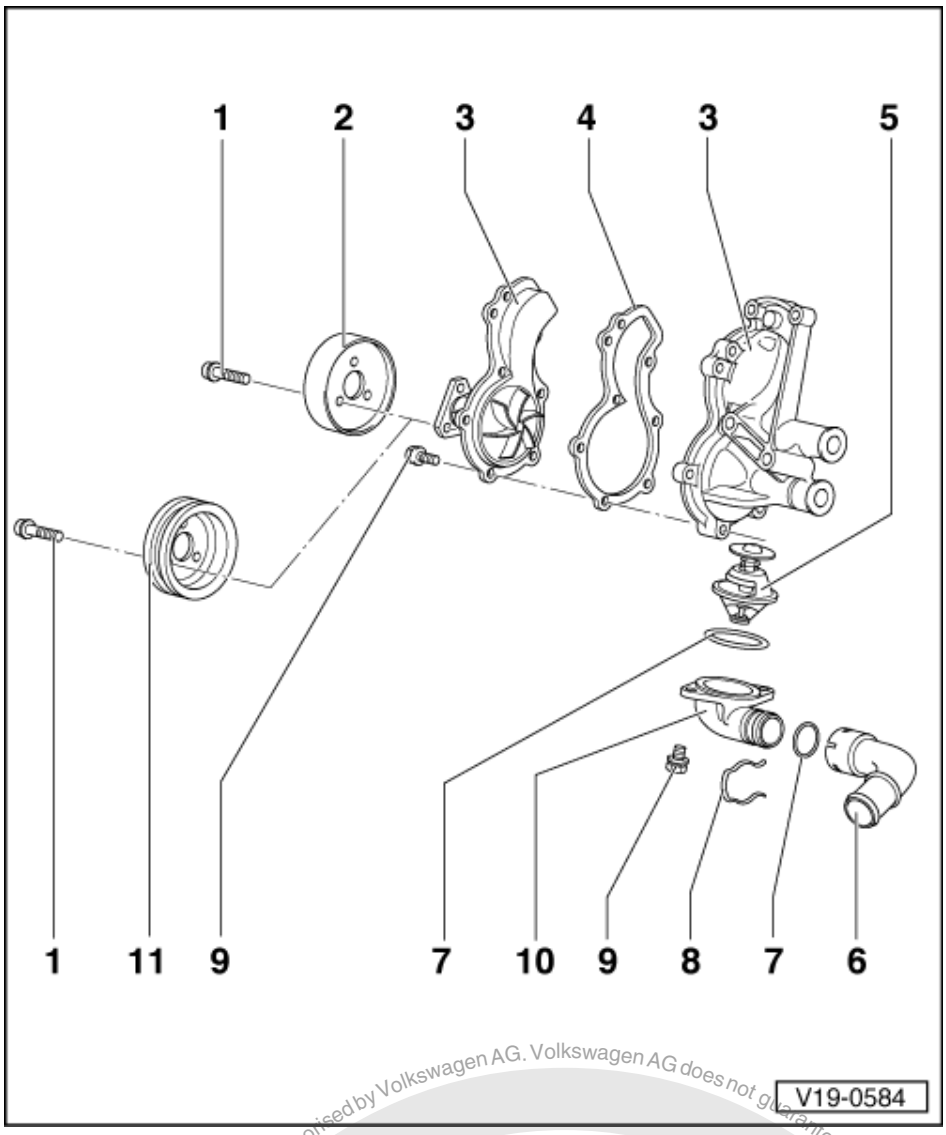

7 O-ring
- Renew if damaged

8 Retaining clip

9 10 Nm

10 Flange

11 Pulley
- Version for V-belt
- Remove and install with V.A.G 1590

Protected by copyright. Copying for private or commercial purposes, in part or in whole, is not permitted unless authorised by Volkswagen AG. Volkswagen AG does not guarantee or accept any liability with respect to the correctness of information in this document. Copyright by Volkswagen AG.
satelettronica

1.5 - Draining and filling cooling system

Draining

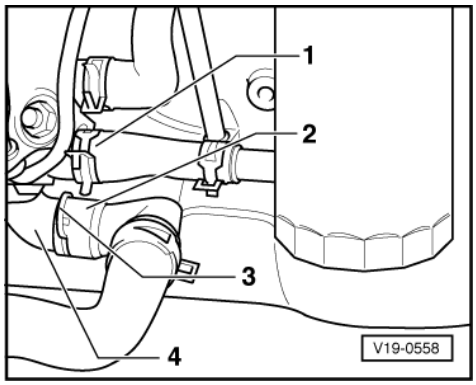

Warning !
Steam can be released when removing the cap from the expansion tank. Cover cap with a cloth and open carefully.

- Remove cap from coolant expansion tank.
- -> Pull out retaining clip -3-, pull connection -2- off thermostat flange -4- and pull off coolant hose -1- or remove thermostat flange -4-.

Note:

Observe disposal regulations!

Filling

Notes:

- Only use coolant additive G 12 in accordance with TL VW 774 F. Distinguishing feature: coloured violet
- G 12 and coolant additives marked "In accordance with TL VW 774 F" prevent frost and corrosion damage, scaling and also raise boiling point of coolant. For this reason the system must be filled all year round with frost and corrosion protection additives.
- G 12 violet (in accordance with TL VW 774 F) can be mixed with the previous coolant additives G 11 and G 12 red!
- Because of its high boiling point, the coolant improves engine reliability under heavy loads, particularly in countries with tropical climates.
- Protection against frost must be assured to about -25 °C (in arctic climatic countries to about -35 °C).
- The coolant concentration must not be reduced by adding water even in warmer seasons and in warmer countries. The anti-freeze ratio must be at least 40 %.

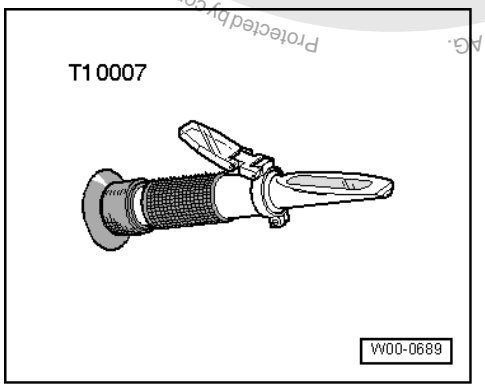

Protected by copyright. Copying for private or commercial purposes, in part or in whole, is not permitted unless authorised by Volkswagen AG. Volkswagen AG does not guarantee or accept any liability with respect to the correctness of information in this document. Copyright by Volkswagen AG.
satelettronica

- If for climatic reasons a greater frost protection is required, the amount of G 12 can be increased, but only up to 60 % (frost protection to about -40 °C), as otherwise frost protection is reduced again and cooling effectiveness is also reduced.
- If radiator, heat exchanger, cylinder head or cylinder head gasket is replaced, do not reuse old coolant.
- The refractometer T10007 is recommended for determining the current anti-freeze density.

Recommended mixture ratios:

Frost protection to	Anti-freeze amount1)	G 122)	Water2)
-25 °C	40 %	2.2 l	3.3 l
-35 °C	50 %	2.75 l	2.75 l

1) The amount of anti-freeze must not exceed 60 %; frost protection and cooling effect will decrease if amount of anti-freeze is too high.

2) The quantity of coolant can vary depending upon the vehicle equipment.

- Install lower coolant hose and secure.

With cooling system charging unit VAS 6096

- Screw adapter V.A.G 1274/3 onto expansion tank.

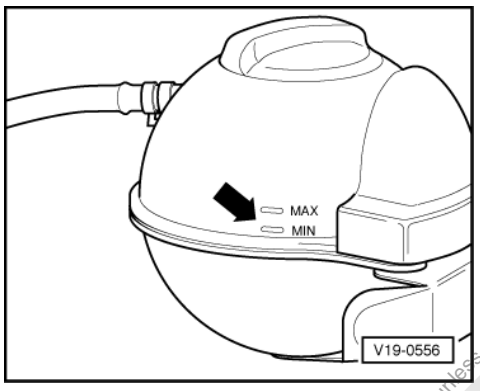

- Fill coolant circuit using cooling system charging unit VAS 6096.

=> Operating instructions for cooling system charging unit VAS 6096

Not using cooling system charging unit VAS 6096

- -> Slowly fill with coolant up to max. mark on expansion tank (filling time approx. 5 minutes).

With and without cooling system charging unit VAS 6096

- Fit expansion tank cap.
- Run engine until radiator fan cuts-in.

Warning !
Steam can be released when removing the cap from the expansion tank. Cover cap with a cloth and open carefully.

- Check coolant level and replenish as necessary. When the engine is at normal operating temperature, the coolant level must be on the max. mark, when the engine is cold, between the min. and max. marks.

Protected by copyright. Copying for private or commercial purposes, in part or in whole, is not permitted unless authorised by Volkswagen AG. Volkswagen AG does not guarantee or accept any liability with respect to the correctness of information in this document. Copyright by Volkswagen AG.
satelettronica

1.6 - Removing and installing radiator and radiator fan

Special tools, testers and auxiliary items

- Pliers V.A.G 1921 for spring type clips

Removing

- Drain coolant => Page 95
- Pull coolant hoses off radiator.
- Pull connectors off thermo-switch and radiator fan.
- Remove radiator fan together with fan ring.
- Remove radiator securing bolts and lift radiator out.

Vehicles with air conditioning system:

- Observe additional information and removal work => Page 97 .

Installing

Installation is carried out in the reverse order, when doing this note the following:

- Filling with coolant => Page 95
- Electrical connections and routing:

=> Current flow diagrams, Electrical fault finding and Fitting locations

Additional information and removal work on vehicles with air conditioner

Warning! The air conditioning system refrigerant circuit must not be opened.

Note:

To prevent damage to condenser and also to the refrigerant lines/hoses, ensure that the pipes and hoses are not stretched, kinked or bent.

- Removing lock carrier with attachments:

=> General body repairs; Repair group 50; Body, front; Removing and installing lock carrier with attachments. Body, front Removing and installing lock carrier with attachments.

- Remove air cleaner.
- Remove air conditioner fluid reservoir and allow to hang free.
- Remove radiator securing bolts.
- Remove retaining clamp(s) from refrigerant pipes.
- Remove condenser from radiator and pull forward as far as is possible.
- Pull radiator out between condenser and lock carrier.
- Secure condenser to body so that refrigerant pipes/hoses are not stressed.
- Check headlight adjustment and adjust if necessary:

=> Maintenance

Protected by copyright. Copyright by Volkswagen AG. Volkswagen AG does not guarantee or accept any liability with respect to the correctness of information in this document. Copyright by Volkswagen AG. Unauthorised access authorised for private or commercial purposes, in part or in whole, is not permitted.
satelettronica

20 - Fuel supply system

1 - Removing and installing parts of fuel supply system

1.1 - Removing and installing parts of fuel supply system

Notes:

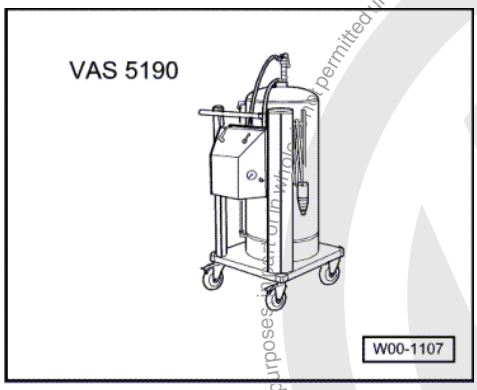

- Always replace clamp-type clips with spring or screw-type clips.
- Fuel hoses in engine compartment must only be secured with spring-type clips. The use of clamp or screw-type clips is not permissible.
- Assembly tool VAS 5024 or hose clip pliers V.A.G 1921 are recommended for fitting spring-type clips.
- The fuel extraction unit VAS 5190 is recommended to empty the fuel tank.

Observe safety precautions=> Page 109 .

Observe rules for cleanliness => Page 110 .

Adjusting throttle cable => Page 110

Removing and installing accelerator pedal => Page 109 , Fig. 3

Copyright by Volkswagen AG. Volkswagen AG does not guarantee or accept any liability with respect to the correctness of information in this document. Copying for private or commercial purposes, in whole or in part, is not permitted unless authorised by Volkswagen AG. Protected by copyright.
satelettronica

1.2 - Removing and installing fuel tank with its attachments

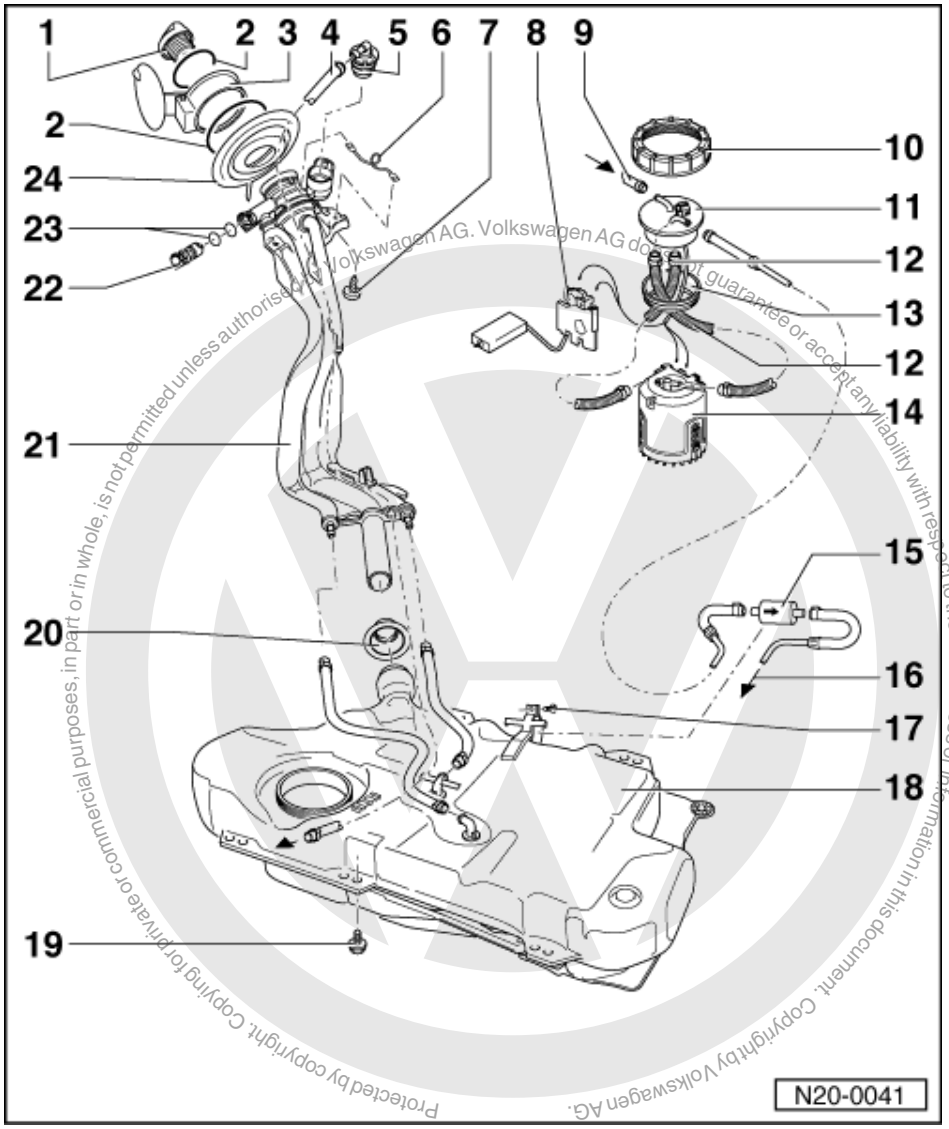

Protected by copyright. Copying for private or commercial purposes, in part or in whole, is not permitted unless authorised by Volkswagen AG. Volkswagen AG does not guarantee or accept any liability with respect to the correctness of information in this document. Copyright by Volkswagen AG.

Fuel system Polo Classic, Polo Estate

Fuel system Caddy

=> Page 104

Note:

After completing work on fuel delivery unit or fuel gauge sender ensure that the corrugated tubing between delivery unit and flange does not contact the fuel tank (transfer of pump noises).

1 Cap
2 Retaining ring

satelettronica

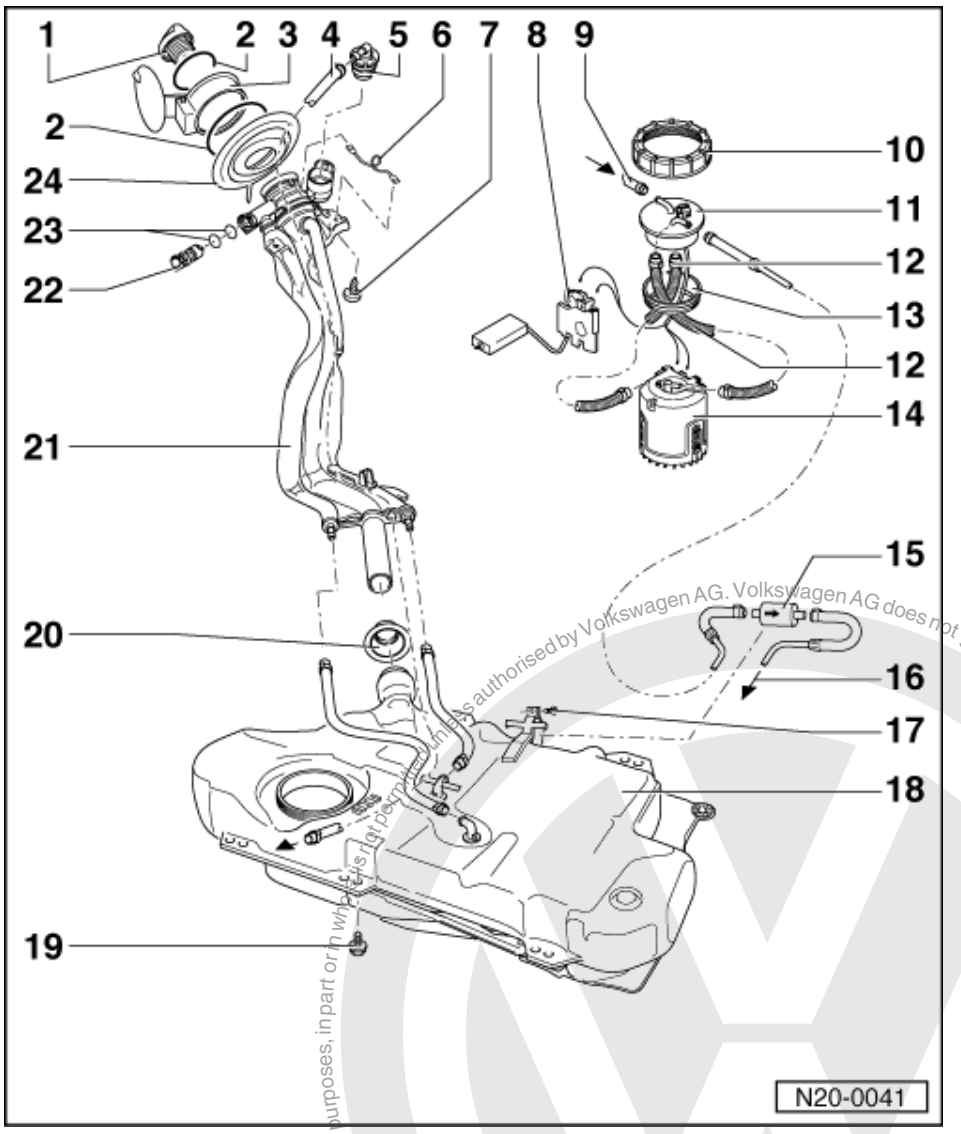

3 Tank flap unit
- Removing and installing

=> General body repairs; Repair group 55; fuel flap unit fuel flap unit

4 Vent pipe
- To activated charcoal filter
  =>Page 120 , Item 6

5 Gravity/overflow valve
- To remove, release locking lug and unclip valve upwards out of filler neck
- Check valve for through-flow
  valve vertical: open,
  valve tilted 90 °: closed

6 Earth connection

7 4 Nm

8 Fuel gauge sender

Protected by copyright. Copying for private or commercial purposes, in part or in whole, is not permitted unless authorised by Volkswagen AG. Volkswagen AG does not guarantee or accept any liability with respect to the correctness of information in this document. Copyright by Volkswagen AG.
satelettronica

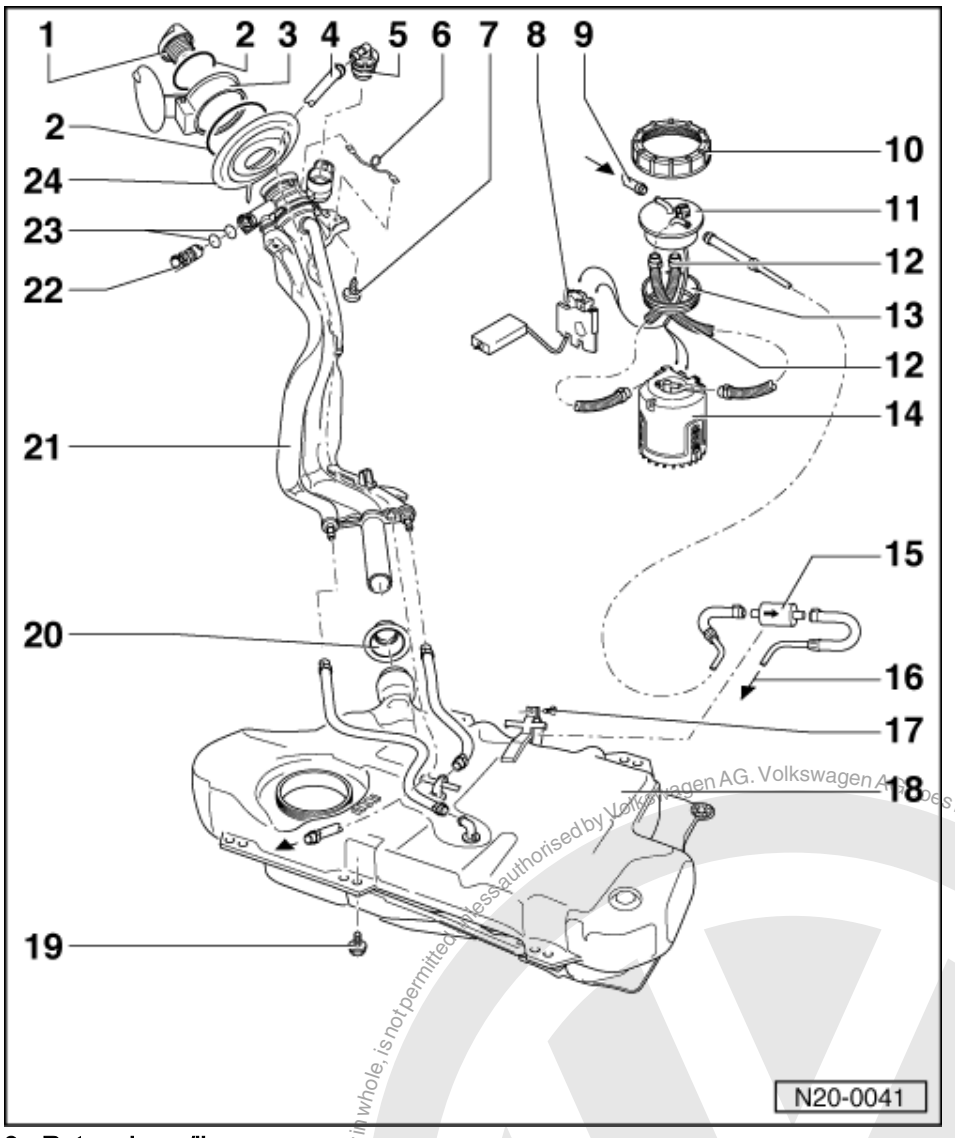

9 Return hose/line
- Blue or with blue marking
- From fuel manifold or injection unit

=> Repair group 24; mixture preparation, injection mixture preparation, injection

10 Union nut, 75 Nm
- Remove and install with 3217

11 Flange
- Note fitting position on fuel tank => Fig. 1

12 Corrugated tube
- Must not contact fuel tank, otherwise pump noises will be transferred

13 Sealing ring
- Coat with fuel when installing
- Renew if damaged

Protected by copyright. Copying for private or commercial purposes, in part or in whole, is not permitted unless authorised by Volkswagen AG. Volkswagen AG does not guarantee or accept any liability with respect to the correctness of information in this document. Copyright by Volkswagen AG.
satelettronica

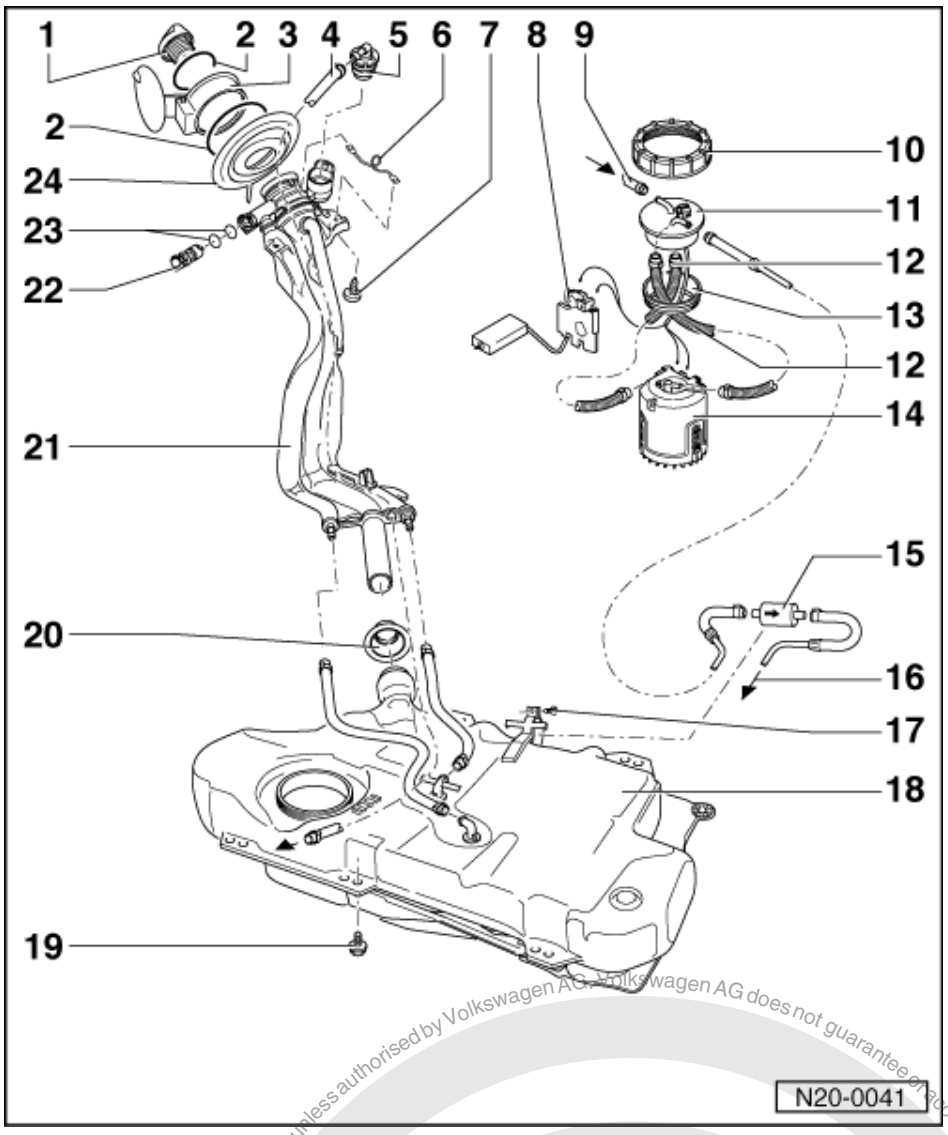

14 Fuel delivery unit

- Removing and installing
  => Page 111
- Checking fuel pump
  => Page 112

15 Fuel filter

- Fitting position: Arrow points in direction of flow

16 Supply pipe

- Black
- To fuel manifold or injection unit

=> Repair group 24; mixture preparation, injection mixture preparation, injection

17 3 Nm

18 Fuel tank

- Removing and installing
  => Page 117
- Press clamping washer from heat shield tightly onto pins on vehicle floor

Protected by copyright. Copying for private or commercial purposes, in part or in whole, is not permitted unless authorised by Volkswagen AG. Volkswagen AG does not guarantee or accept any liability with respect to the correctness of information in this document. Copyright by Volkswagen AG.
satelettronica

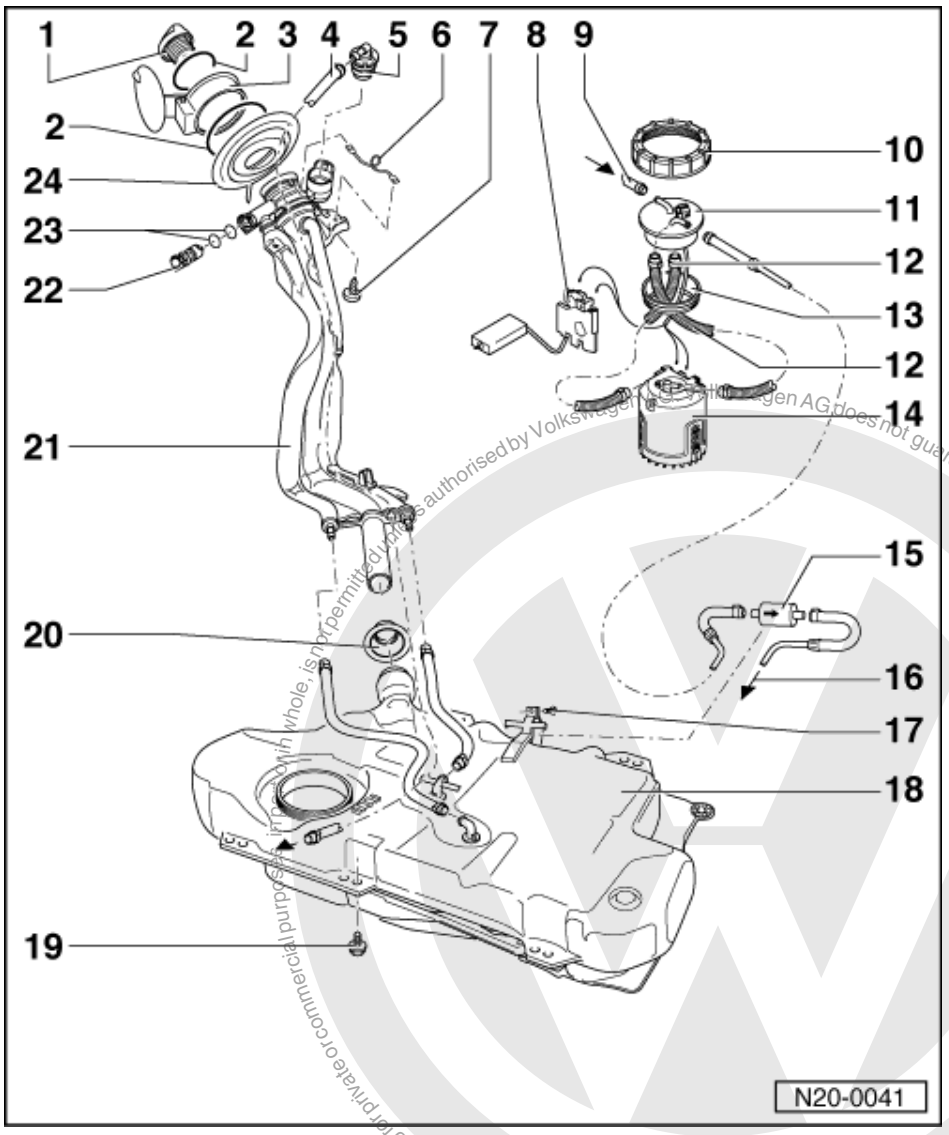

19 25 Nm

20 Sealing boot

- After installing filler pipes fit over fuel tank connections, having turned boot inside out

21 Filler pipes

- With non-return valve

22 Vent valve

- Checking =>Fig. 2
- To remove pull locking latch lightly to inside -arrow- and pull valve out

23 O-ring

- Renew if damaged

24 Cup

- For filler pipes

Protected by copyright. Copying for private or commercial purposes, in part or in whole, is not permitted unless authorised by Volkswagen AG. Volkswagen AG does not guarantee or accept any liability with respect to the correctness of information in this document. Copyright by Volkswagen AG.
satelettronica

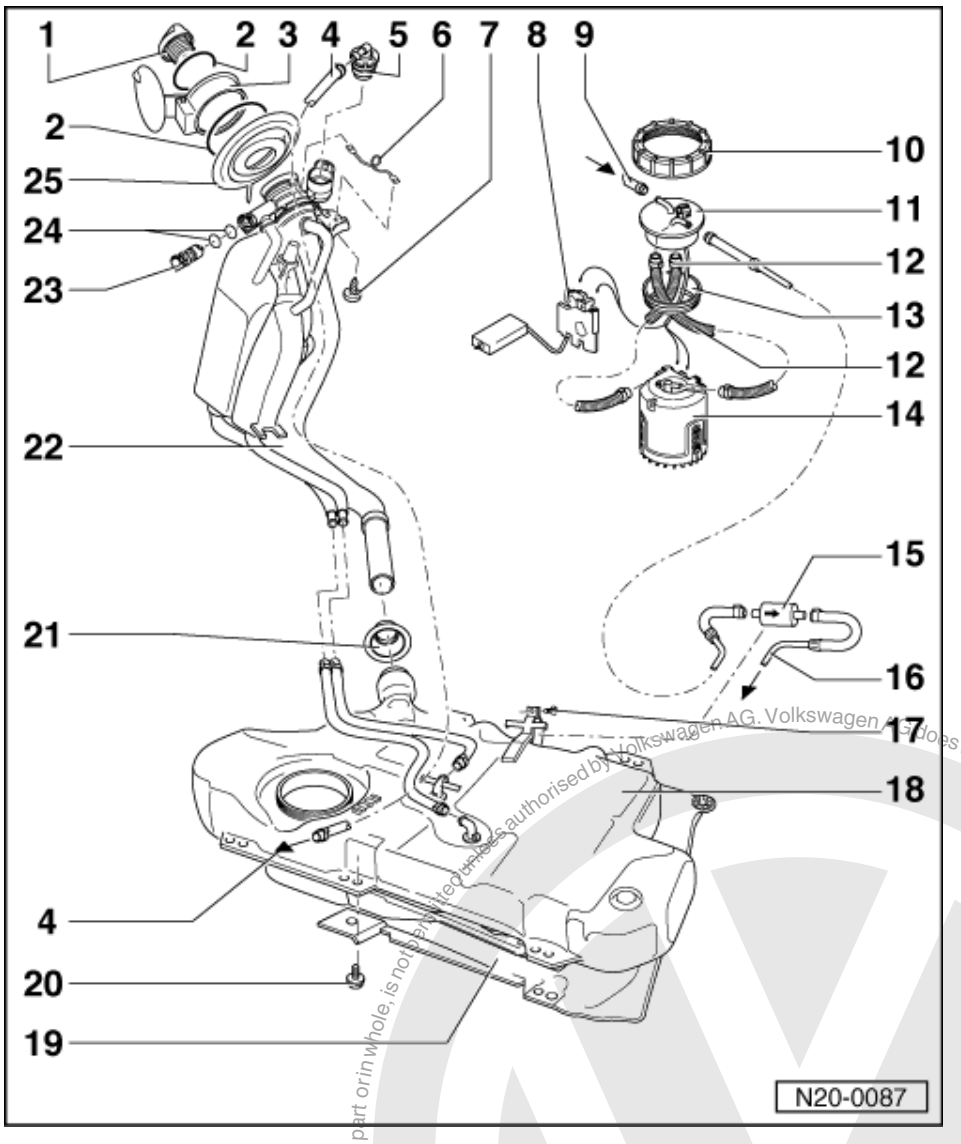

Fuel system Caddy

Note:

After completing work on fuel delivery unit or fuel gauge sender ensure that the corrugated tubing between delivery unit and flange does not contact the fuel tank (transfer of pump noises).

1 Cap
2 Retaining ring
3 Tank flap unit
- Removing and installing

=> General body repairs; Repair group 55; fuel flap unit fuel flap unit

4 Vent pipe
- To activated charcoal filter
  =>Page 121 , Item 6

Protected by copyright. Copying for private or commercial purposes, in part or in whole, is not permitted unless authorised by Volkswagen AG. Volkswagen AG does not guarantee or accept any liability with respect to the correctness of information in this document. Copyright by Volkswagen AG.
satelettronica

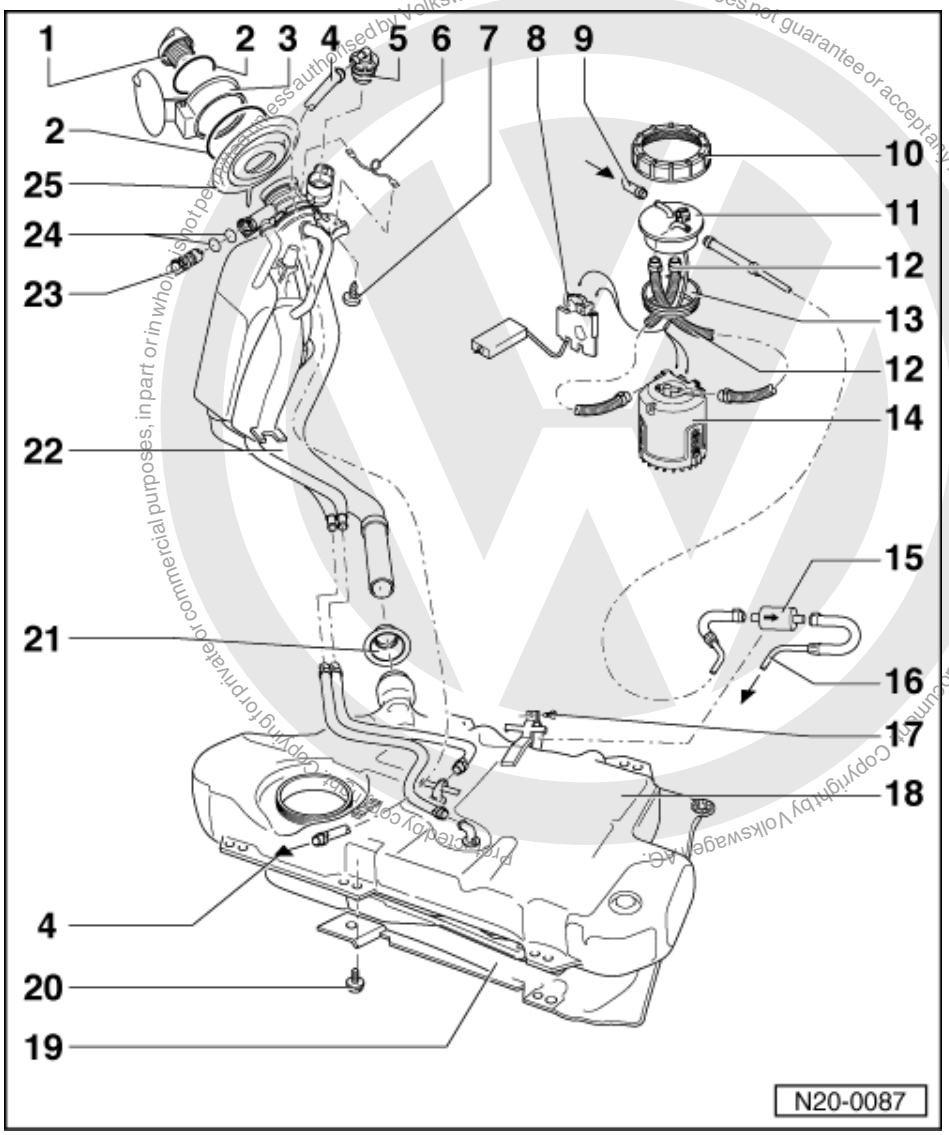

5 Gravity/overflow valve
- To remove, release locking lug and unclip valve upwards out of filler neck
- Check valve for through-flow
  valve vertical: open,
  valve tilted 90 °: closed

6 Earth connection

7 4 Nm

8 Fuel gauge sender

9 Return hose/line
- Blue or with blue marking
- From injection unit

10 Union nut, 75 Nm
- Remove and install with 3217

11 Flange
- Note fitting position on fuel tank => Fig. 1

satelettronica

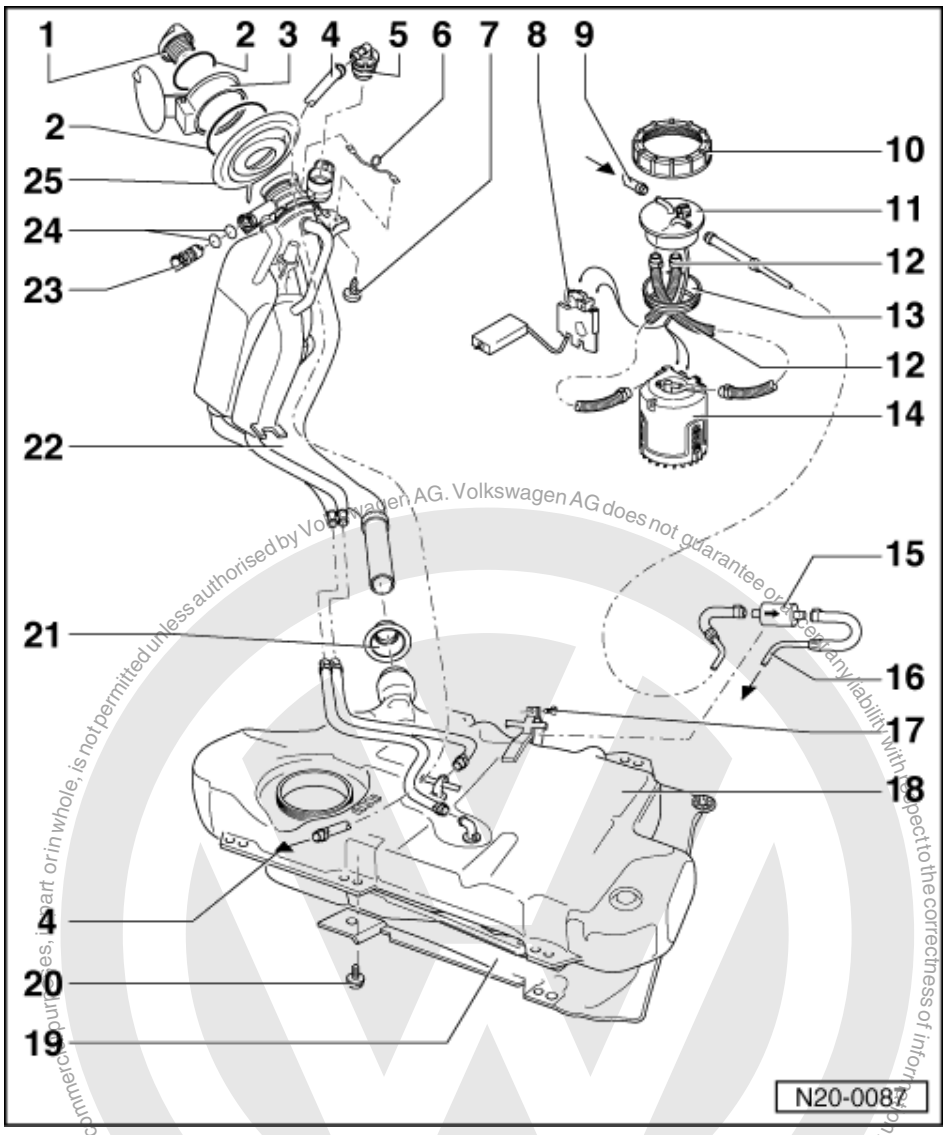

12 Corrugated tube
- Must not contact fuel tank, otherwise pump noises will be transferred

13 Sealing ring
- Coat with fuel when installing
- Renew if damaged

14 Fuel delivery unit
- Removing and installing
  => Page 111
- Checking fuel pump
  => Page 112

15 Fuel filter
- Fitting position: Arrow points in direction of flow

16 Supply pipe
- Black
- To injection unit

17 3 Nm

Protected by copyright. Copyright by Volkswagen AG.
Volkswagen AG does not guarantee or assume any liability with respect to the correctness of information in this document. Copyright by Volkswagen AG.
Commercial use, in part or in whole, is not permitted unless authorised by Volkswagen AG.
satelettronica

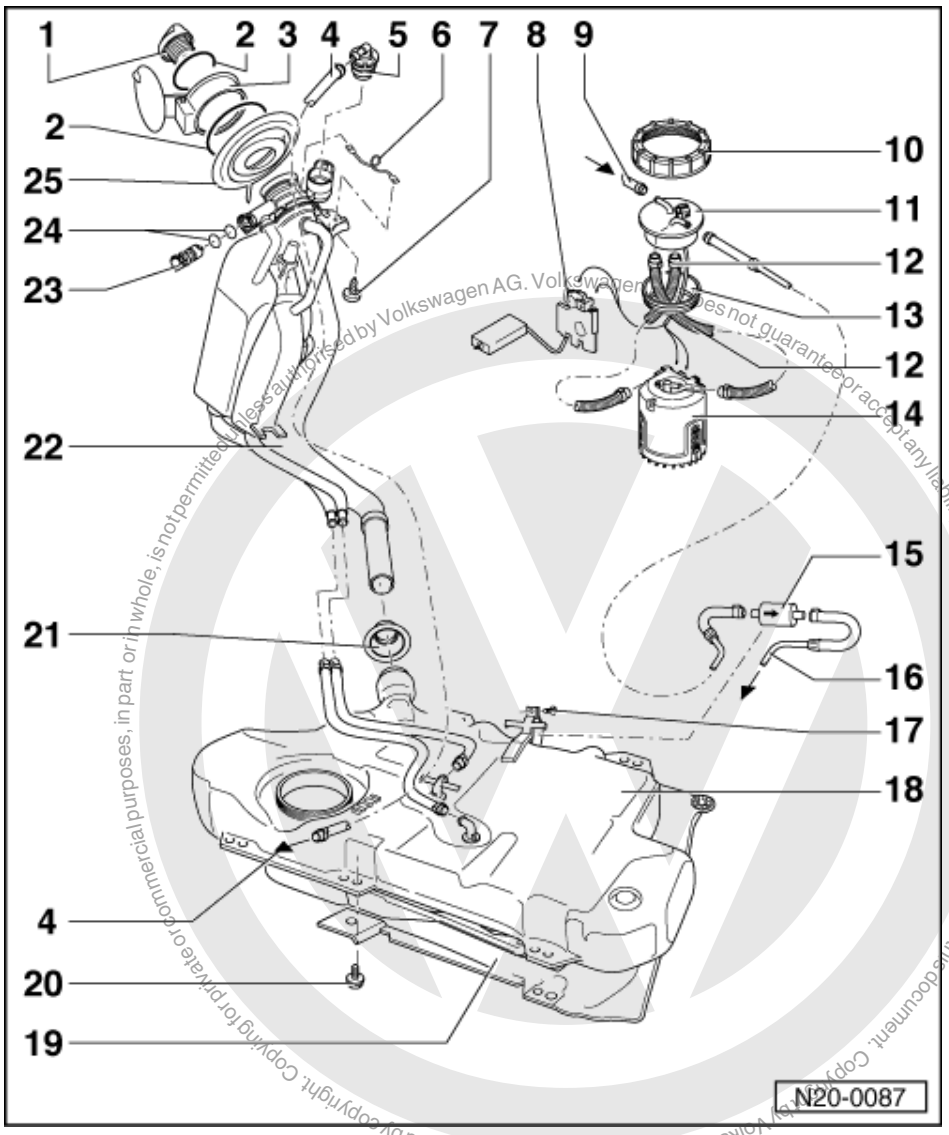

18 Fuel tank

- Removing and installing
  => Page 117

19 Heat shield

- Press clamping washer from heat shield tightly onto pins on vehicle floor

20 25 Nm

21 Sealing boot

- After installing filler pipes fit over fuel tank connections, having turned boot inside out

22 Filler neck

- With non-return valve

23 Vent valve

- Checking =>Fig. 2
- To remove pull locking latch lightly to inside -arrow- and pull valve out

Protected by copyright. Copying for private or commercial purposes, in part or in whole, is not permitted unless authorised by Volkswagen AG. Volkswagen AG does not guarantee or accept any liability with respect to the correctness of information in this document. Copyright by Volkswagen AG.
satelettronica

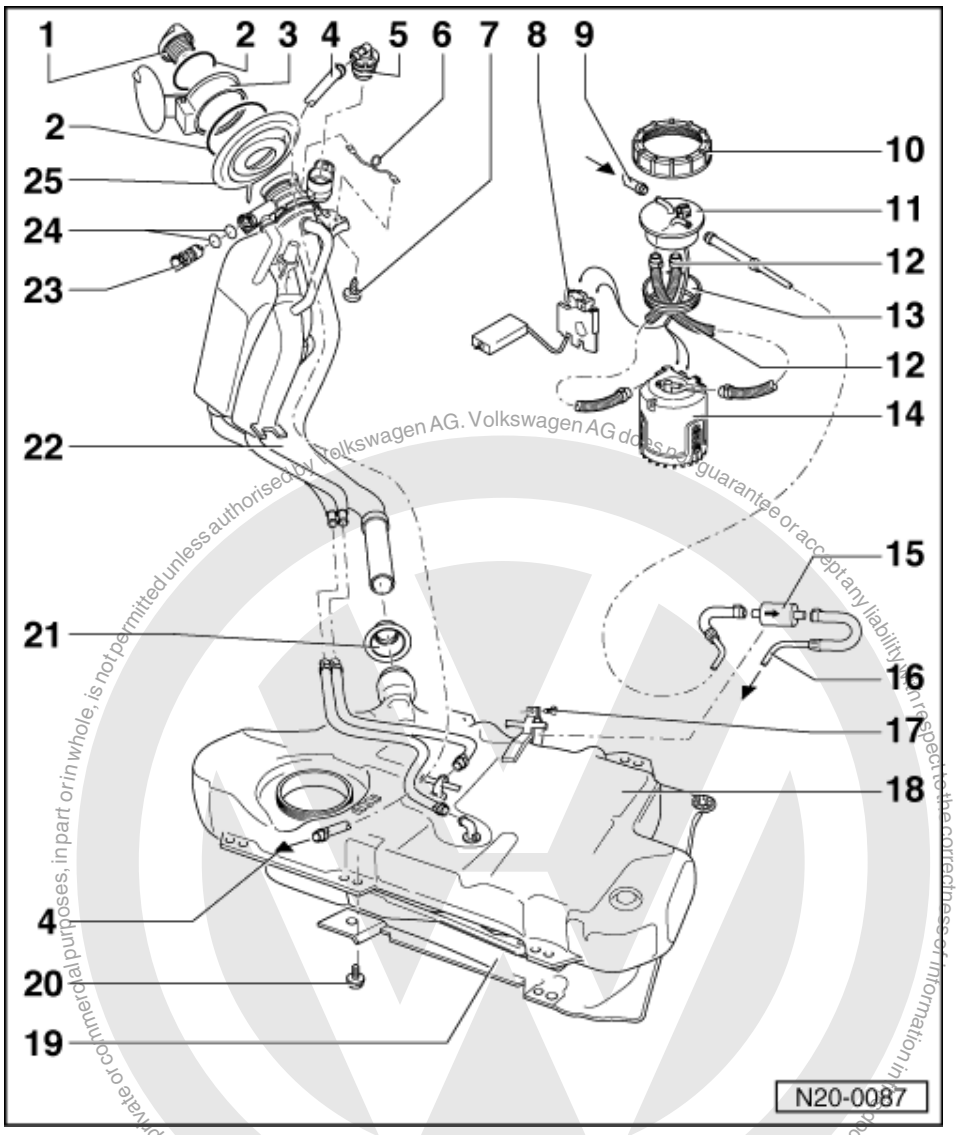

24 O-ring
- Renew if damaged

25 Cup
- For filler pipes

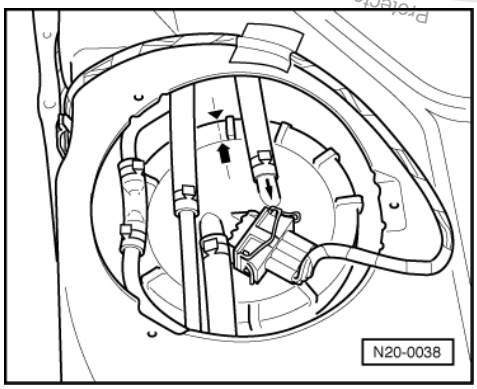

Protected by copyright. Copying for private or commercial purposes, in part or in whole, is not permitted unless authorised by Volkswagen AG. Volkswagen AG does not guarantee or accept any liability in respect to the correctness of information in this document. Copyright by Volkswagen AG.
satelettronica

-> Fig. 1 Installation position of fuel delivery unit flange

Marking on the flange must align with marking on the fuel tank.

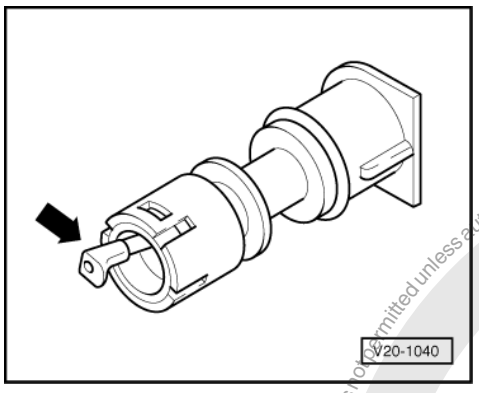

-> Fig. 2 Checking vent valve

Lever in rest position: Closed

Lever pushed in direction of arrow: Open

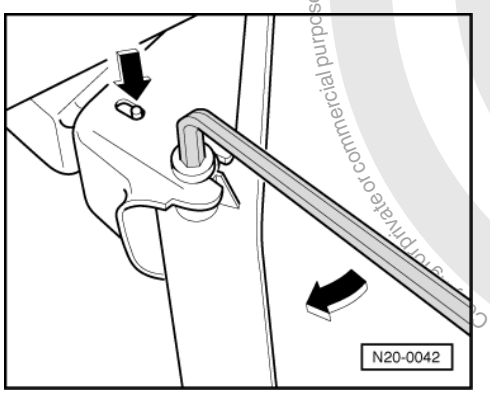

-> Fig. 3 Removing and installing accelerator pedal

To remove the accelerator pedal, press the accelerator pedal shaft locking device carefully out of the drilling - arrow-, then turn the shaft with a 6 mm hexagon key until it can be pulled out.

1.3 - Safety precautions when working on the fuel supply system

Warning!
Fuel supply lines are under pressure! Before removing from hose connection wrap a cloth around the connection. Then release pressure by carefully pulling hose off connection.

When removing and installing the fuel gauge sender or fuel pump (fuel delivery unit) from a full or partly full fuel tank the following must be observed:

- Before commencing work, switch on exhaust extraction system and place an extraction hose close to the sender opening in the fuel tank to extract escaping fuel fumes.
  If no exhaust extraction system is available, a radial fan (as long as motor is not in air flow) with a displacement greater than 15 m3/h can be used.

Protected by copyright. Copyright by Volkswagen AG.
Copy for private or commercial purposes, in part or in whole, is not permitted unless authorised by Volkswagen AG. Volkswagen AG does not guarantee or accept any liability with respect to the correctness of information in this document.
satelettronica

- Prevent skin contact with fuel! Wear fuel-resistant gloves!

1.4 - Rules for cleanliness

When working on the fuel supply/injection system, pay careful attention to the following "5 rules":

- Thoroughly clean all unions and the adjacent areas before disconnecting.
- Place parts that have been removed on a clean surface and cover. Do not use fluffy cloths!
- Carefully cover opened components or seal, if the repair cannot be carried out immediately.
- Only install clean components:
  Only unpack replacement parts immediately prior to installation.
  Do not use parts that have been stored loose (e.g. in tool boxes etc.).
- When the system is open:
  Do not work with compressed air if this can be avoided.
  Do not move vehicle unless absolutely necessary.

Protected by copyright. Copying for private or commercial purposes, in part or in whole, is not permitted unless authorised by Volkswagen AG. Volkswagen AG does not guarantee or accept any liability with respect to the correctness of information in this document. Copyright by Volkswagen AG.

1.5 - Adjusting throttle cable

Engine code AFT

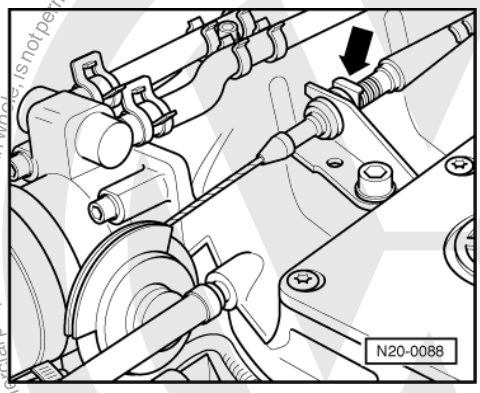

- -> Adjust throttle cable by moving the retainer at the support bracket so that the full throttle position is just attained at the throttle valve lever.

Engine code letters 1F, ADZ

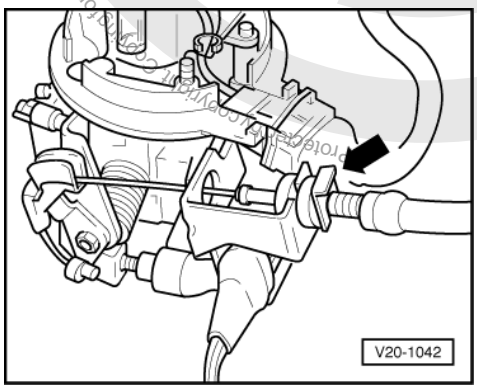

- -> Adjust throttle cable by moving the retainer at the support bracket so that the full throttle position is just attained at the throttle valve lever.

satelettronica

1.6 - Removing and installing fuel delivery unit

Note:

Check whether a coded radio is installed as during the forthcoming work sequences the battery earth strap must be disconnected. Obtain radio code first if necessary.

Special tools, testers and auxiliary items

- Union nut spanner 3217

Removing

- Observe safety precautions => Page 109
- With ignition switched off disconnect battery earth strap.

Caddy Van:

- Lift front right section of load area floor covering.
- Remove right-hand load compartment floor panel.

=> General body repairs; Repair group 70; Removing and installing load compartment floor panel (Caddy)
Removing and installing load compartment floor panel (Caddy)

- Remove floor cover.

Caddy Kombi, Polo Classic, Polo Estate:

- Fold rear seat forwards.
- Remove floor cover.

When the floor cover is removed:

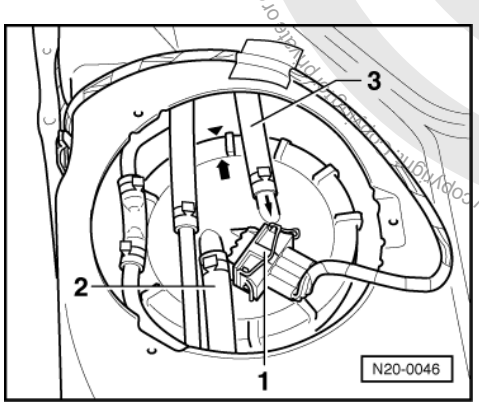

- -> Pull off connector -1- and supply and return pipes -2, 3- on flange.
- Remove union nut from flange with 3217.
- Pull flange and seal out from opening in fuel tank.
- Release delivery unit from bayonet connection by turning to left and remove from fuel tank.

Note:

If the delivery unit is to be renewed then drain old delivery unit before disposal.

Installing

- Installing the fuel delivery unit is carried out in the reverse order.

Notes:

- When inserting the fuel delivery unit ensure that the fuel gauge sender is not bent.
- When the fuel delivery unit is correctly installed the fuel gauge sender float points to fuel filler pipes.

Protected by copyright. Copyright by Volkswagen AG. Volkswagen AG does not guarantee or accept any liability with respect to the correctness of information in this document. Copyright by Volkswagen AG. Private or commercial use, parts, whole not permitted unless authorised by Volkswagen AG.
satelettronica

- Coat flange seal with fuel when fitting.
- Fitting position of fuel delivery unit flange => Page 109 , Fig. 1 .

1.7 - Checking fuel pump

Special tools, testers and auxiliary items

- Remote control V.A.G 1348/3A with adapter cable V.A.G 1348/3-2
- Adapter set V.A.G 1594
- Multimeter V.A.G 1715
- Diode test lamp V.A.G 1527
- Current flow diagram
- Union nut spanner 3217
- Pressure tester V.A.G 1318
- Adapter 1318/1
- Adapter 1318/10
- Adapter 1318/11
- Measuring container

Test conditions

- Battery voltage OK.
- Fuse No. 18 OK.

Checking function and voltage supply

Note:

Check whether a coded radio is installed as during the forthcoming work sequences the battery earth strap must be disconnected. Obtain radio code first if necessary.

- Switch on ignition.

Fuel pump must be heard to run briefly.

If the fuel pump does not run:

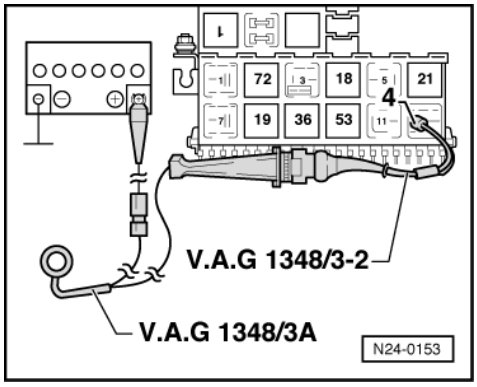

- -> Pull the fuel pump relay (J17) out of relay plate with fuse box (relay position 12).

Note:

If the relay cannot be removed from the relay plate without tools then first disconnect battery earth strap.

- Connect remote control V.A.G 1348/3A with adapter cable V.A.G 1348/3-2 to contact 4 and battery positive (+).
- Operate remote control.

Protected by copyright. Copying for private or commercial purposes, in part or in whole, is not permitted unless authorised by Volkswagen AG. Volkswagen AG does not guarantee or accept any liability with respect to the correctness of information in this document. Copyright by Volkswagen AG.
satelettronica

Fuel pump runs:

- Check activation of fuel pump relay:

=> Current flow diagrams, Electrical fault finding and Fitting locations, Fuel supply system

Fuel pump does not run:

Caddy Van:

- Lift front right section of load area floor covering.
- Remove right-hand load compartment floor panel.

=> General body repairs; Repair group 70; Removing and installing load compartment floor panel (Caddy)
Removing and installing load compartment floor panel (Caddy)

- Remove floor cover.

Caddy Kombi, Polo Classic, Polo Estate:

- Fold rear seat forwards.
- Remove floor cover.

When the floor cover is removed:

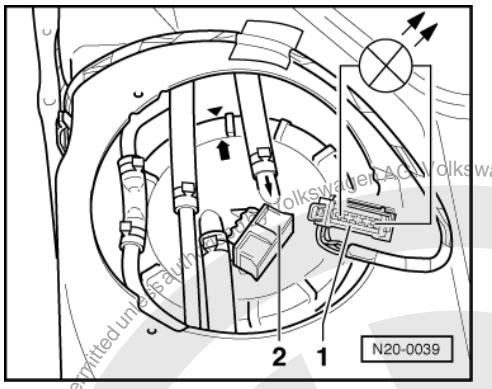

- -> Pull 4-pin connector -1- off fuel tank flange -2-.
- Connect diode test lamp V.A.G 1527 using aux. cables from V.A.G 1594 to the outer contacts of the connector.
- Operate remote control.
  LED must light up

LED does not light up:

- Locate and eliminate open circuit using current flow diagram

LED lights up (voltage supply OK.):

- Unscrew union nut from flange with 3217.
- Check if the electric wiring between flange and fuel pump is connected.

If not open circuit can be found:

- Renew fuel delivery unit.

Checking delivery rate

Test conditions

• Voltage supply OK.

satelettronica
Volkswagen AG does not guarantee or accept any liability with respect to the correctness of information in this document. Copyright by Volkswagen AG.
Protected by copyright. Copying for private or commercial purposes, in part or in whole, is not permitted unless authorised by Volkswagen AG.

- Remote control V.A.G 1348/3A connected.

Test sequence

- Remove filler cap from fuel tank filler neck.

Warning!
Fuel supply lines are under pressure! Before removing from hose connection wrap a cloth around the connection. Then release pressure by carefully pulling hose off connection.

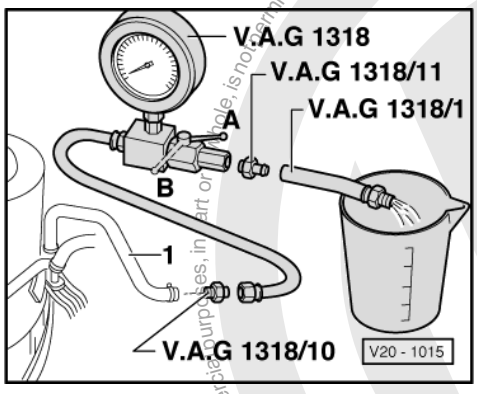

Engine code AFT

- -> Pull the fuel supply pipe -1- off fuel rail.
- Connect pressure gauge V.A.G 1318 with adapter 1318/10 to the fuel supply pipe -1- .

Engine code letters 1F, ADZ

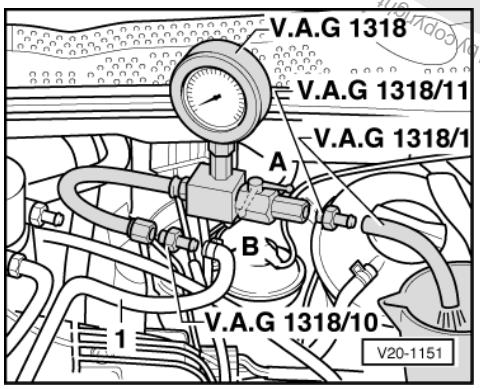

- -> Pull the fuel supply hose -1- off injection unit.
- Connect pressure gauge V.A.G 1318 using adapter 1318/10 to fuel supply pipe.

Continued for all engine codes

- Push the hose V.A.G 1318/1 onto the adapter V.A.G 1318/11 on the pressure gauge and hold hose in a measuring container.
- Open the pressure gauge shut-off tap. The lever then points in the direction of flow -A-.
- Operate remote control V.A.G 1348/3A. Whilst doing this slowly close the cut-off tap, until gauge shows
  Engine code AFT: 3 bar
  Engine code 1F, ADZ: 1.2 bar
  From now on do not alter the position of the cut-off tap.
- Empty the measuring container.
- Connect multimeter to vehicle battery to measure voltage using auxiliary cables from V.A.G 1594.
- Operate remote control for
  30 seconds

Protected by copyright. Copying for private or commercial purposes, in part or in whole, is not permitted unless authorised by Volkswagen AG. Volkswagen AG does not guarantee or accept any liability with respect to the correctness of information in this document. Copyright by Volkswagen AG.
satelettronica

and measure battery voltage

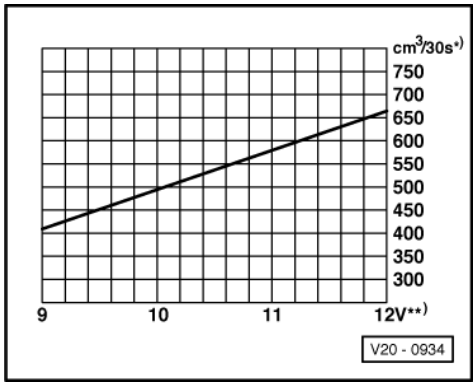

- Compare the quantity of fuel delivered with specification.

-> Graph for engine code AFT

*) Minimum delivery cm3/30 seconds

**) Voltage at fuel pump with engine stopped and pump running (approx. 2 volts less than battery voltage).

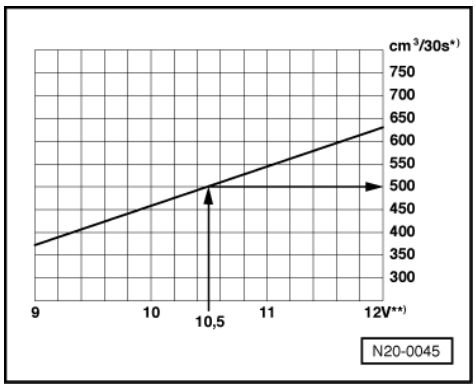

-> Graph for engine code 1F, ADZ

*) Minimum delivery cm3/30 seconds

**) Voltage at fuel pump with engine stopped and pump running (approx. 2 volts less than battery voltage).

Example:

During the test a voltage of 12.5 volts is measured at the battery. As the voltage at the pump is approx. 2 volts less than the battery voltage then this will equate to a minimum delivery of 500 cm3/30 s.

If the minimum delivery rate is not attained:

- Check the fuel pipes for possible restrictions (kinks) or blockages.

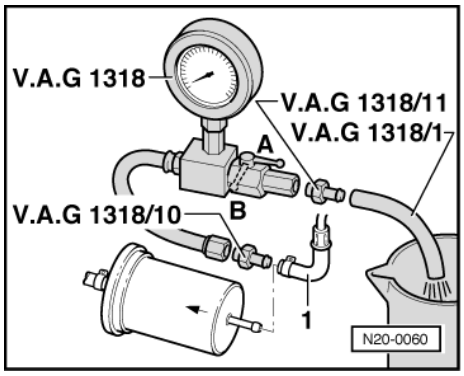

Protected by copyright. Copying for private or commercial purposes, in part or in whole, is not permitted unless authorised by Volkswagen AG. Volkswagen AG does not guarantee or accept any liability with respect to the correctness of information in this document. Copyright by Volkswagen AG.
satelettronica

- -> Pull the supply hose -1- off inlet to fuel filter.
- Connect the pressure gauge V.A.G 1318 to hose with adapter 1318/10.
- Repeat delivery rate check.

If the minimum delivery rate is now attained:

- Replace the fuel filter.

If the minimum delivery rate is again not attained:

- Remove the fuel delivery unit and check the strainer filter for soiling.

Only when up to now no fault has been detected:

- Replace the fuel delivery unit.

If the delivery rate has been attained but nevertheless you suspect a fuel supply system fault (e.g. intermittent failure of fuel supply system):

- Check the current draw of the fuel pump as follows:
- Reconnect all disconnected fuel pipes.

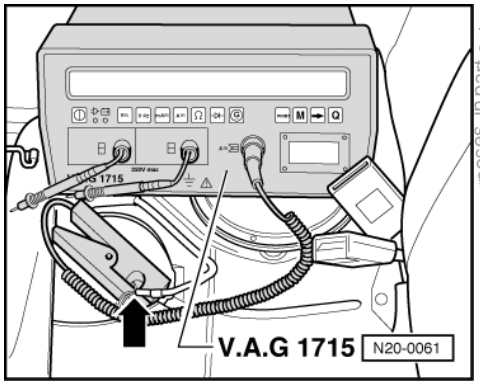

- -> Connect the multimeter V.A.G 1715 using the current clamp to the red/yellow wire from wiring loom.
- Start the engine and run at idling speed.
- Measure the current draw of the fuel pump.
  Specification: max. 8 amps.

Note:

If the fuel system malfunction is intermittent, you can perform the check during a test drive with the help of a 2nd person.

If the current draw is exceeded:

- Replace the fuel delivery unit.

Checking fuel pump non-return valve

Test conditions

- Remote control V.A.G 1348/3A connected
- Pressure gauge V.A.G 1318 connected

Protected by copyright. Copying for private or commercial purposes, in part or in whole, is not permitted unless authorised by Volkswagen AG. Volkswagen AG does not guarantee or accept any liability with respect to the correctness of information in this document. Copyright by Volkswagen AG.
satelettronica

Test sequence

Note:

With this check the fuel supply pipe connections from the fuel delivery unit to the point at which the pressure gauge V.A.G 1318 is connected will be checked for leaks at the same time.

- Close pressure gauge cut-off tap (lever at right angle to direction of flow).
- Operate remote control at short intervals, until a pressure of
  Engine code AFT: 3 bar
  Engine code 1F, ADZ: 2 bar
  has built up.

Warning! Danger of spray when opening the shut-offtap, hold container over the free connection of the pressure gauge.

- If pressure builds up too high, lower excess pressure by carefully opening the shut-off tap.
- Watch pressure drop. After 10 minutes the pressure must not drop below
  Engine code AFT: 2 bar
  Engine code 1F, ADZ: 1.2 bar

If the pressure drops further:

- Check pipe connections for leaks.

If no fault is detected in the wiring:

- Replace the fuel delivery unit.

1.8 - Removing and installing fuel tank

Note:

Check whether a coded radio is installed as during the forthcoming work sequences the battery earth strap must be disconnected. Obtain radio code first if necessary.

Removing

- With ignition switched off disconnect battery earth strap.

Caddy Van:

- Lift front right section of load area floor covering.
- Remove right-hand load compartment floor panel.

=> General body repairs; Repair group 70; Removing and installing load compartment floor panel (Caddy)

Removing and installing load compartment floor panel (Caddy)

- Remove floor cover.

Caddy Kombi, Polo Classic, Polo Estate:

- Fold rear seat forwards.
- Remove floor cover.

When the floor cover is removed:

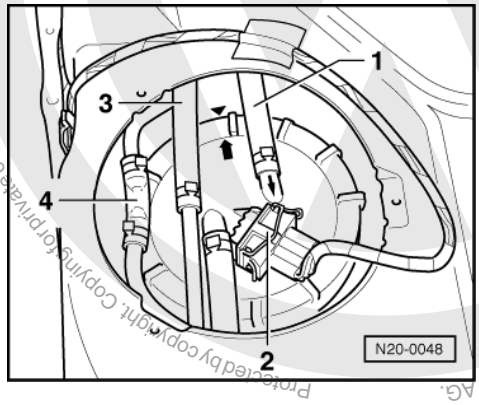

Protected by copyright. Copying for private or commercial purposes, in part or in whole, is not permitted unless authorised by Volkswagen AG. Volkswagen AG does not guarantee or accept any liability with respect to the correctness of information in this document. Copyright by Volkswagen AG.
satelettronica

- -> Pull off fuel return hose -1- and connector -2- on flange.
- Separate fuel supply pipe -3- and breather pipe -4- at hose connections.
- Drain fuel tank.

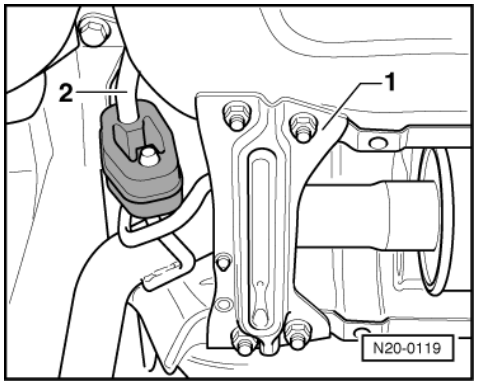

- -> Remove rear connecting support -1-.
- Remove all rear exhaust system mountings -2- from body and secure the slightly lowered exhaust system with wire to body.
- Remove rear right wheel.
- Unbolt filler neck from body.
- Take filler cap off filler neck and unclip neck from cup.

Polo Classic, Polo Estate:

- Pull off breather hoses at filler neck.
- Remove clamping disc for fuel tank heat shield.
- Unbolt fuel tank from body and lower tank slightly using gearbox jack.
- Remove filler neck.
- Take out fuel tank together with heat shield.

Caddy:

- Remove upper securing nut on shock absorber and push securing bolt inwards approx. 2 cm (do not remove shock absorber).
- Remove heat shield on fuel tank.
- Remove fuel tank, when doing this the filler neck must be guided between shock absorber and spring (turn fuel tank through 90°).

Installing

Install in reverse order but note following:

- Breather and fuel hoses are to be installed kink-free.
- Secure fuel hoses with screw-type clamps.
- Do not interchange supply and return hose (return hose blue or blue markings, supply hose black).

Protected by copyright. Copying for private or commercial purposes, in part or in whole, is not permitted unless authorised by Volkswagen AG. Volkswagen AG does not guarantee or accept any liability with respect to the correctness of information in this document. Copyright by Volkswagen AG.
satelettronica

1.9 - Removing and installing parts of the activated charcoal filter system

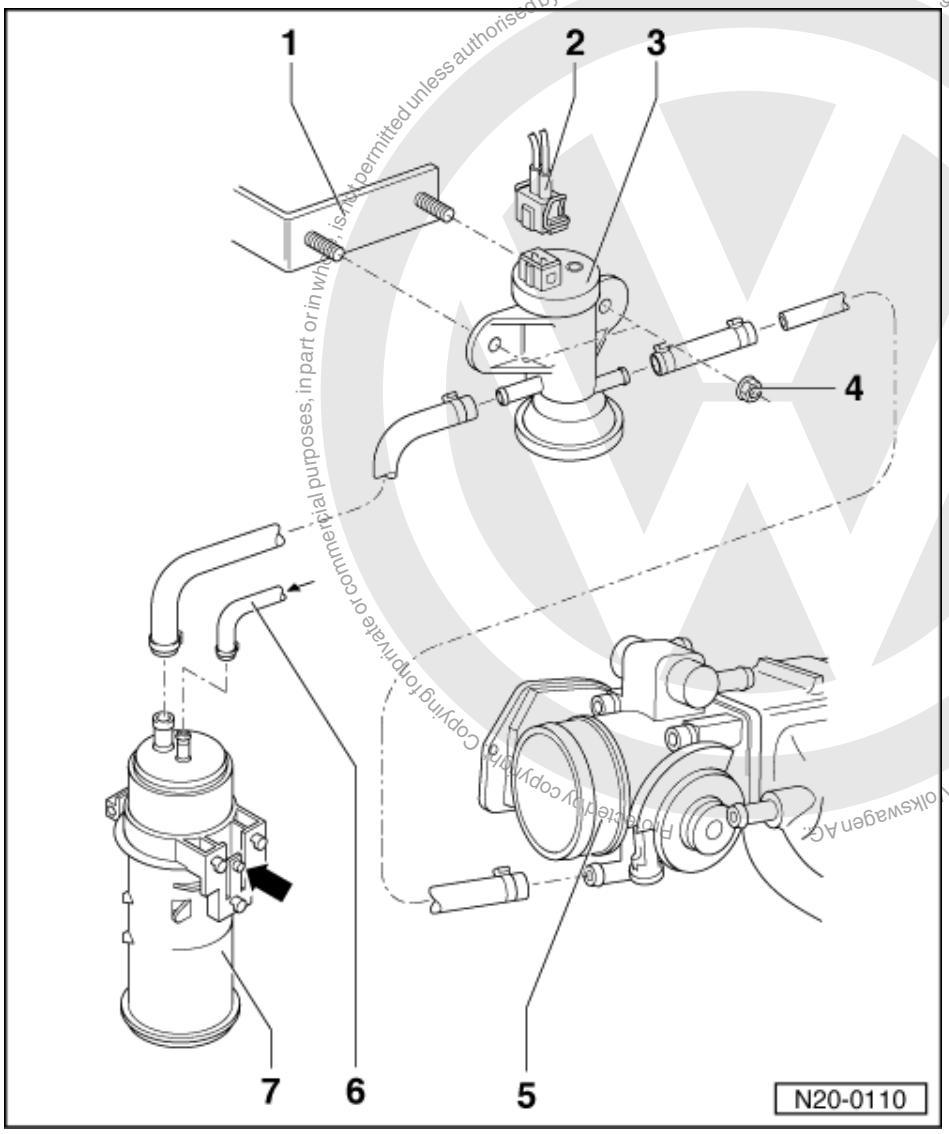

Engine code AFT

1 Bracket
- On body front right

2 Connector

3 Solenoid valve 1 (N80)
- To remove, remove air filter housing
- Valve closed with ignition switched off
- When the engine is warm the valve will be activated from the Simos control unit (pulsed)
- Checking:

=> Repair group 01; Self-diagnosis; Final control diagnosis Self-diagnosis Final control diagnosis

4 10 Nm

satelettronica

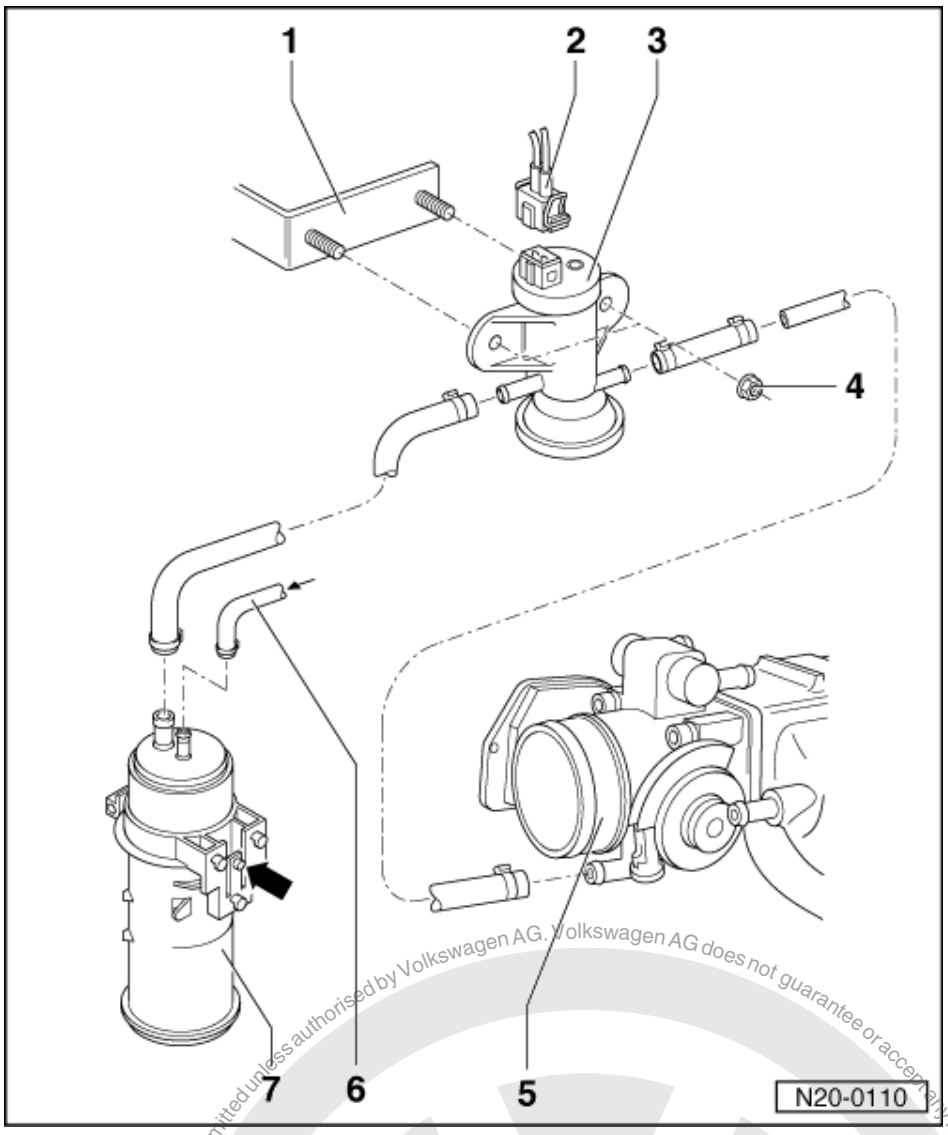

5 Throttle valve control part

6 Vent pipe

- From gravity/overflow valve on fuel tank
  => Page 100 , Item 4

7 Activated charcoal filter

- Location: in front right wheel housing
- To remove push securing strap in direction of arrow

Protected by copyright. Copying for private or commercial purposes, in part or in whole, is not permitted unless authorised by Volkswagen AG. Volkswagen AG does not guarantee or accept any liability with respect to the correctness of information in this document. Copyright by Volkswagen AG.
satelettronica

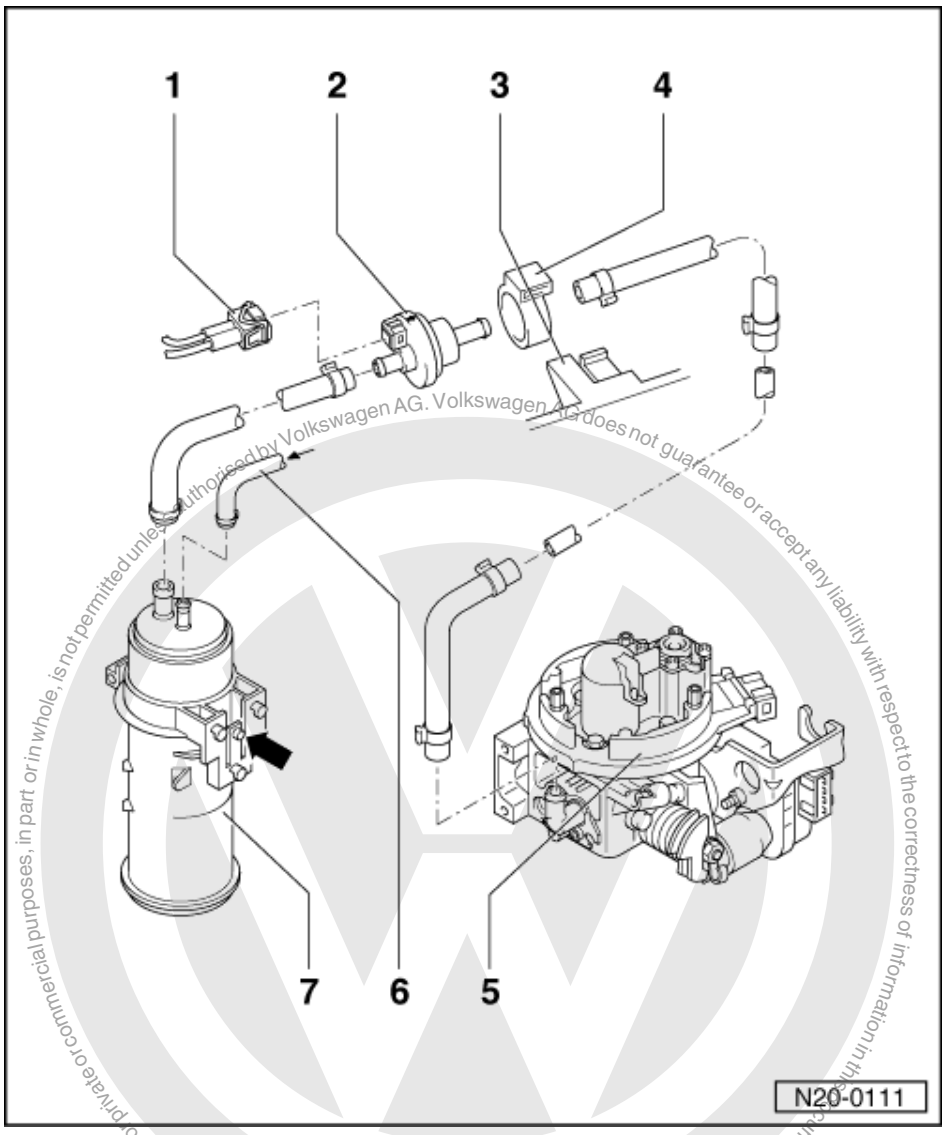

Protected by copyright. Copyright by Volkswagen AG. Copying for private or commercial purposes, in part or in whole, is not permitted unless authorised by Volkswagen AG. Volkswagen AG does not guarantee or accept any liability with respect to the correctness of information in this document.

Engine code 1F, ADZ

1 Connector
2 Solenoid valve 1 (N80)
- With ignition switched off valve is closed
- When the engine is warm the valve will be activated from the Mono Motronic control unit (pulsed)
- Checking:

=> Repair group 01; Self-diagnosis; Final control diagnosis Self-diagnosis Final control diagnosis

3 Bracket
- On air cleaner lower part

4 Retaining ring
5 Injection unit
6 Breather pipe
- From gravity/overflow valve on fuel tank
  => Page 104 , Item 4

satelettronica

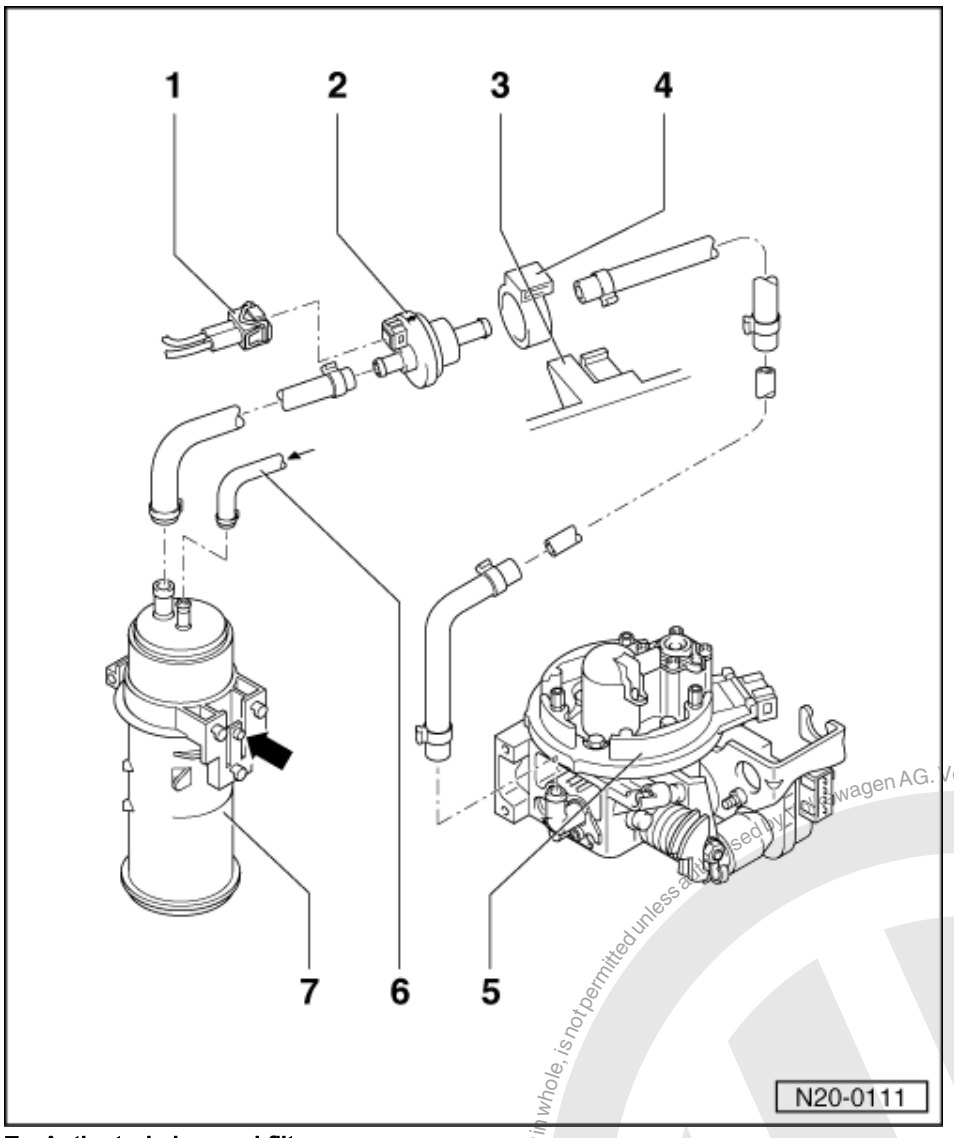

7 Activated charcoal filter
- Location: in front right wheel housing
- To remove push securing strap in direction of arrow

1.10 - Checking fuel tank breather

Special tools, testers and auxiliary items

- Hand vacuum pump V.A.G 1390
- Vacuum tester V.A.G 1368

Checking activated charcoal filter

- Remove air cleaner housing complete.

Protected by copyright. Copying for private or commercial purposes, part or in whole, is not permitted unless authorised by Volkswagen AG. Volkswagen AG does not guarantee or accept any liability with respect to the correctness of information in this document. Copyright by Volkswagen AG.
satelettronica

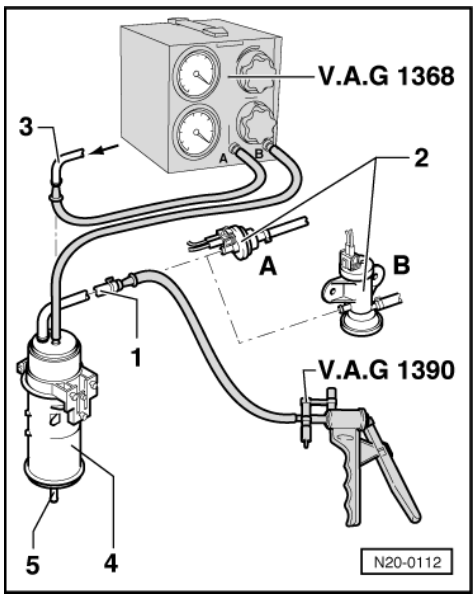

- -> Pull breather hose -1- from activated charcoal filter off solenoid valve -2-.
  A - Solenoid valve engine code 1F, ADZ
  B - Solenoid valve engine code AFT
- Connect hand vacuum pump V.A.G 1390 to hose -1-.
- Pull breather hose -3- from fuel tank off activated charcoal filter -4- and connect to -connection A- of vacuum tester V.A.G 1368.
- Connect vacuum tester V.A.G 1368 -connection B- to activated charcoal filter.
- Set vacuum tester to position -B-.

- Operate hand vacuum pump V.A.G 1390 several times.
  Vacuum must not
  build up.

If vacuum builds up:

- Check breather connection -5- on activated charcoal filter -4- for soiling, clean if necessary.

Checking lines to fuel tank and fuel cap

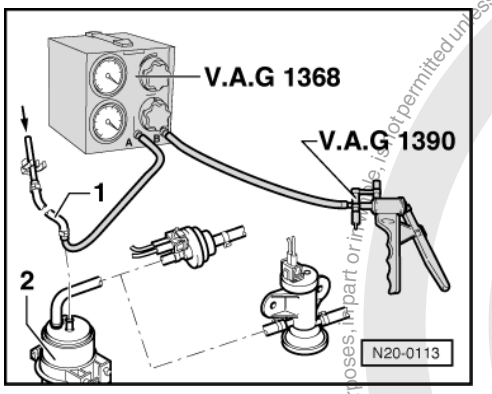

- -> Pull breather hose -1- from fuel tank off at activated charcoal filter -2-.
- Connect hand vacuum pump V.A.G 1390 and vacuum tester V.A.G 1368 as shown to hose -1-.
- Set vacuum tester to -A/B- position.
- Remove fuel filler cap from filler neck.
- Operate V.A.G 1390 several times. Vacuum must
  not build-up.

If vacuum builds-up:

- Check gravity valve.
  Engine code AFT => Page 105 , Item 5

Protected by copyright. Copying for private or commercial purposes, in part or in whole, is not permitted unless authorised by Volkswagen AG. Volkswagen AG does not guarantee or accept any liability with respect to the correctness of information in this document. Copyright by Volkswagen AG.
satelettronica

- Check line -1- from fuel tank for blockage.

If vacuum does not build up:

- Refit fuel filler cap.
- Operate hand vacuum pump V.A.G 1390 several times.
  Vacuum must not build up.

Note:

If the fuel level in the tank is low the hand vacuum must be operated at least 20...30 times.

If vacuum builds up:

- Replace fuel tank cap.

Protected by copyright. Copying for private or commercial purposes, in part or in whole, is not permitted unless authorised by Volkswagen AG. Volkswagen AG does not guarantee or accept any liability with respect to the correctness of information in this document. Copyright by Volkswagen AG.

satelettronica

26 - Exhaust system

1 - Removing and installing parts of exhaust system

1.1 - Removing and installing parts of exhaust system

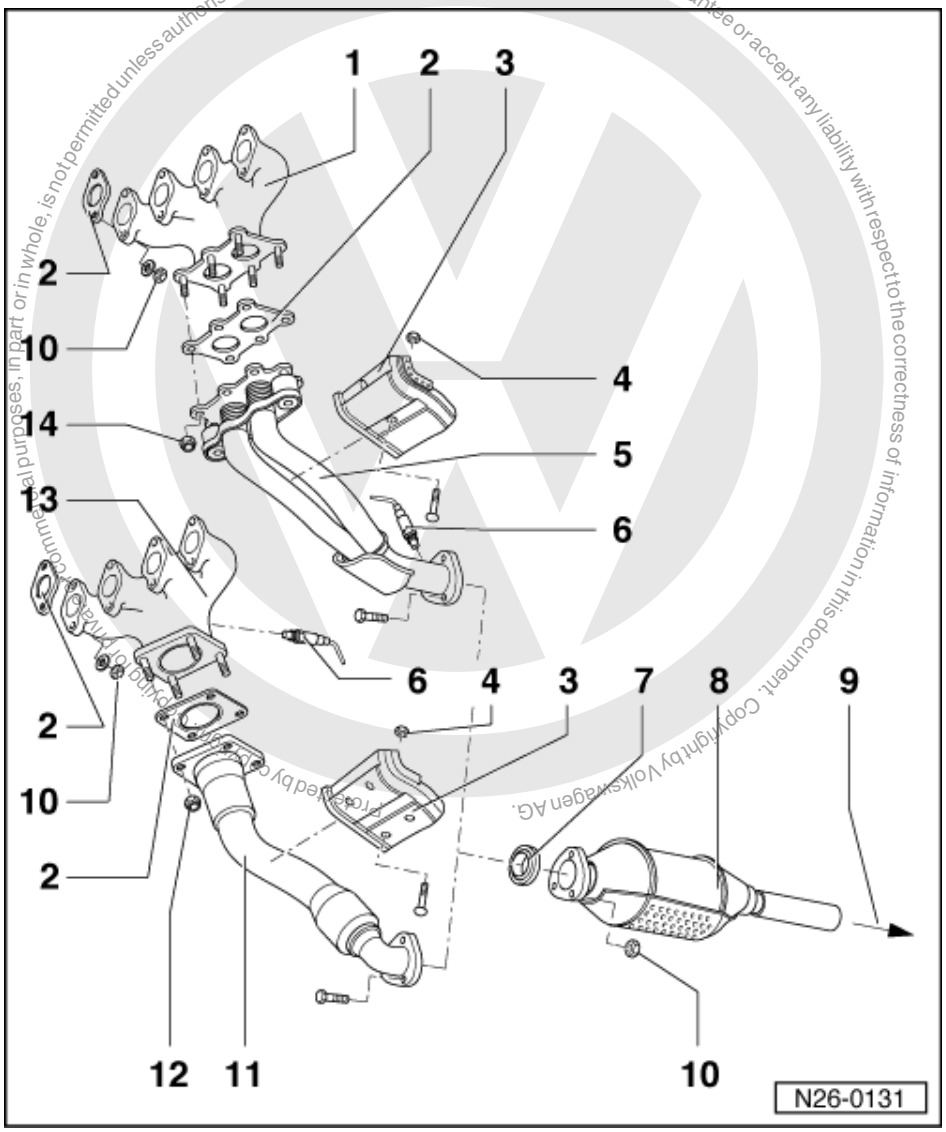

Notes:

- After working on the exhaust system ensure that the system is not under stress, and that it has sufficient clearance from the bodywork. If necessary, loosen clamps and align silencer and exhaust pipe so that sufficient clearance is maintained to the bodywork and the support rings are evenly loaded.
- For engine code 1F and ADZ the front exhaust pipe and the catalyst are one component.
- Renew self-locking nuts.

Exhaust manifold, front exhaust pipe with catalyst, Lambda probe

1 Exhaust manifold
- Engine code AFT

satelettronica

- Tighten warm air collector plate to 25 Nm

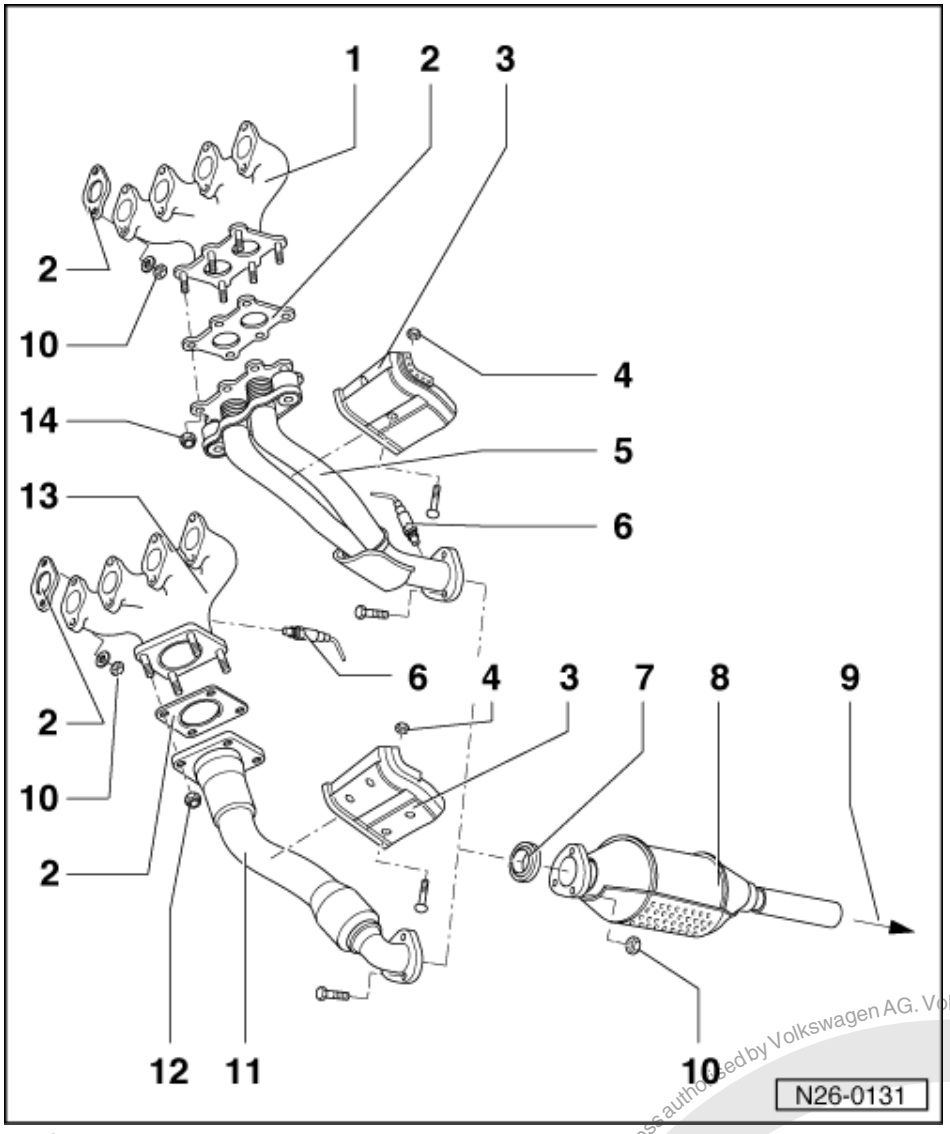

2 Gasket
- Renew

3 Heat shield

4 10 Nm

5 Front exhaust pipe
- Engine code AFT

6 Lambda probe, 55 Nm
- Grease only the threads with "G5"; "G5" must not get into the slots on the probe body
- Remove and install with 3337
- Checking:

=> Repair group 24; injection and ignition system injection and ignition system

7 Sealing ring
- Renew

8 Catalyst
- Can only be renewed complete with front exhaust pipe for engine code 1F and ADZ. On these vehicles without catalyst a front silencer is installed instead of catalyst.

Protected by copyright. Copying for private or commercial purposes, in part or in whole, is not permitted unless authorised by Volkswagen AG. Volkswagen AG does not guarantee or accept any liability with respect to the correctness of information in this document. Copyright by Volkswagen AG.
satelettronica

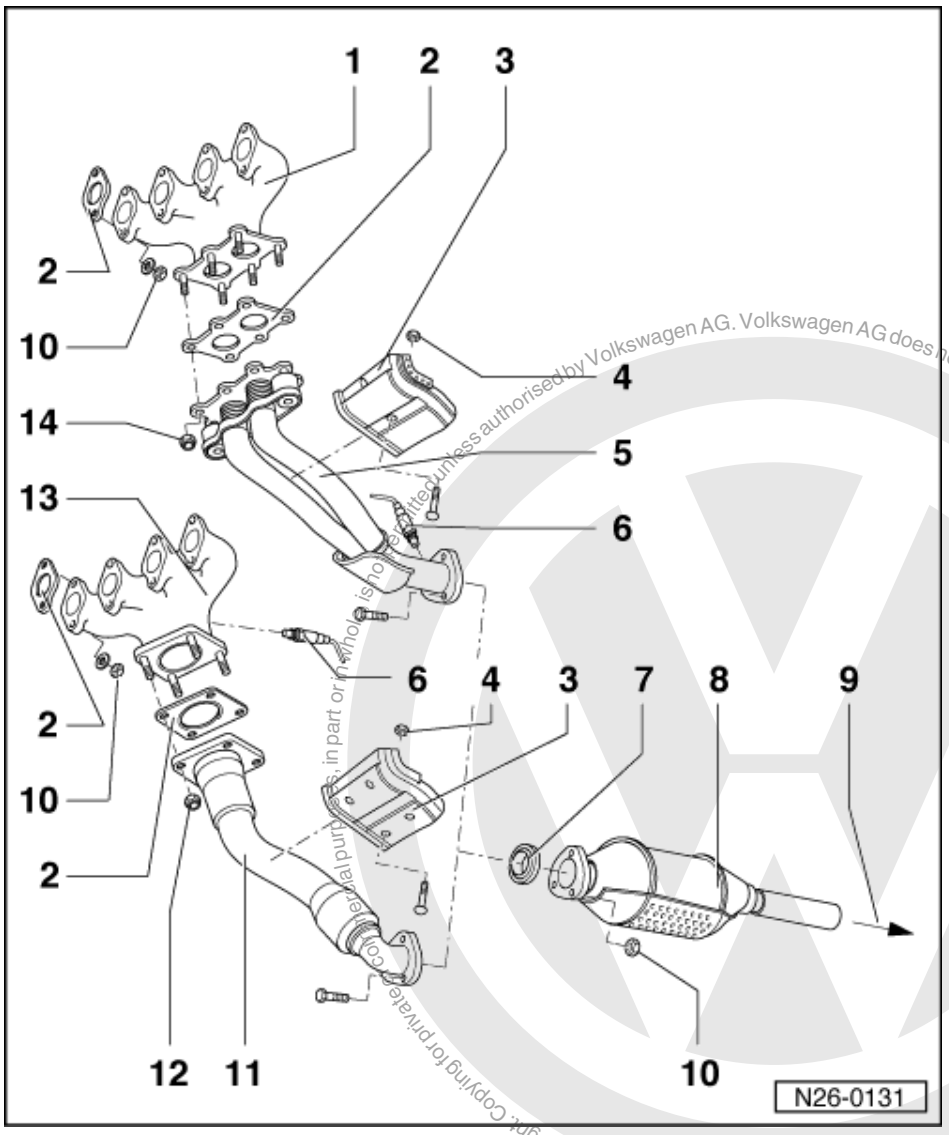

9 To silencer

10 25 Nm

11 Front exhaust pipe

- Engine code: 1F and ADZ
  Vehicles with catalyst:
- Can only be renewed complete with catalyst

12 40 Nm

13 Exhaust manifold

- Engine code: 1F and ADZ
- Tighten warm air collector plate to 25 Nm

14 40 Nm

- Tightening sequence
  => Page 26-10, Fig. 1

Protected by copyright. Copying for private or commercial purposes, in part or in whole, is not permitted unless authorised by Volkswagen AG. Volkswagen AG does not guarantee or accept any liability with respect to the correctness of information in this document. Copyright by Volkswagen AG.
satelettronica

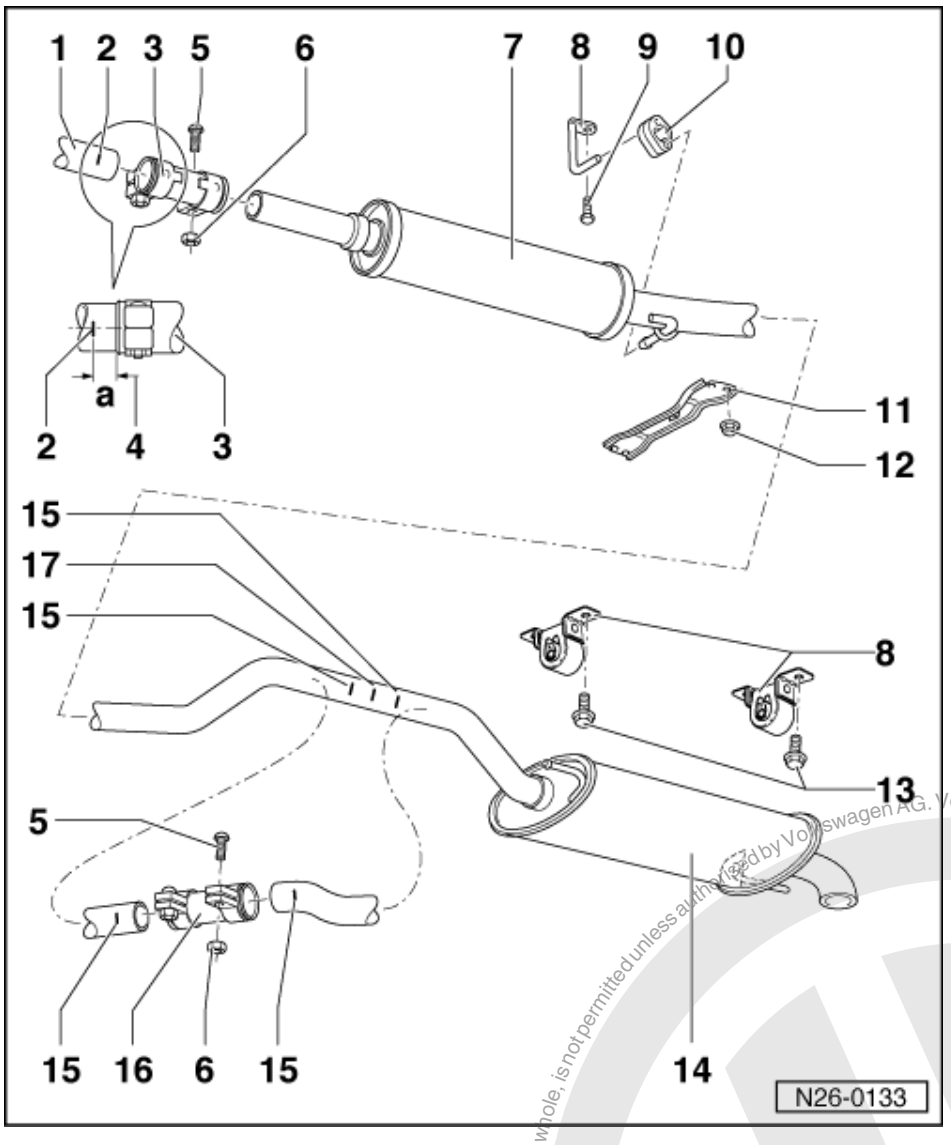

Silencer with mountings Caddy

Silencer with mountings

Polo Classic, Polo Estate

=> Page 131 .

1 Catalyst
2 Marking
- Three times on circumference

3 Double clamp
4 Dimension-a- = ca. 5 mm
5 Carriage bolt
6 40 Nm
7 Front silencer1)
8 Mounting
9 25 Nm

Protected by copyright. Copying for private or commercial purposes, in part or in whole, is not permitted unless authorised by Volkswagen AG. Volkswagen AG does not guarantee or accept any liability with respect to the correctness of information in this document. Copyright by Volkswagen AG.
satelettronica

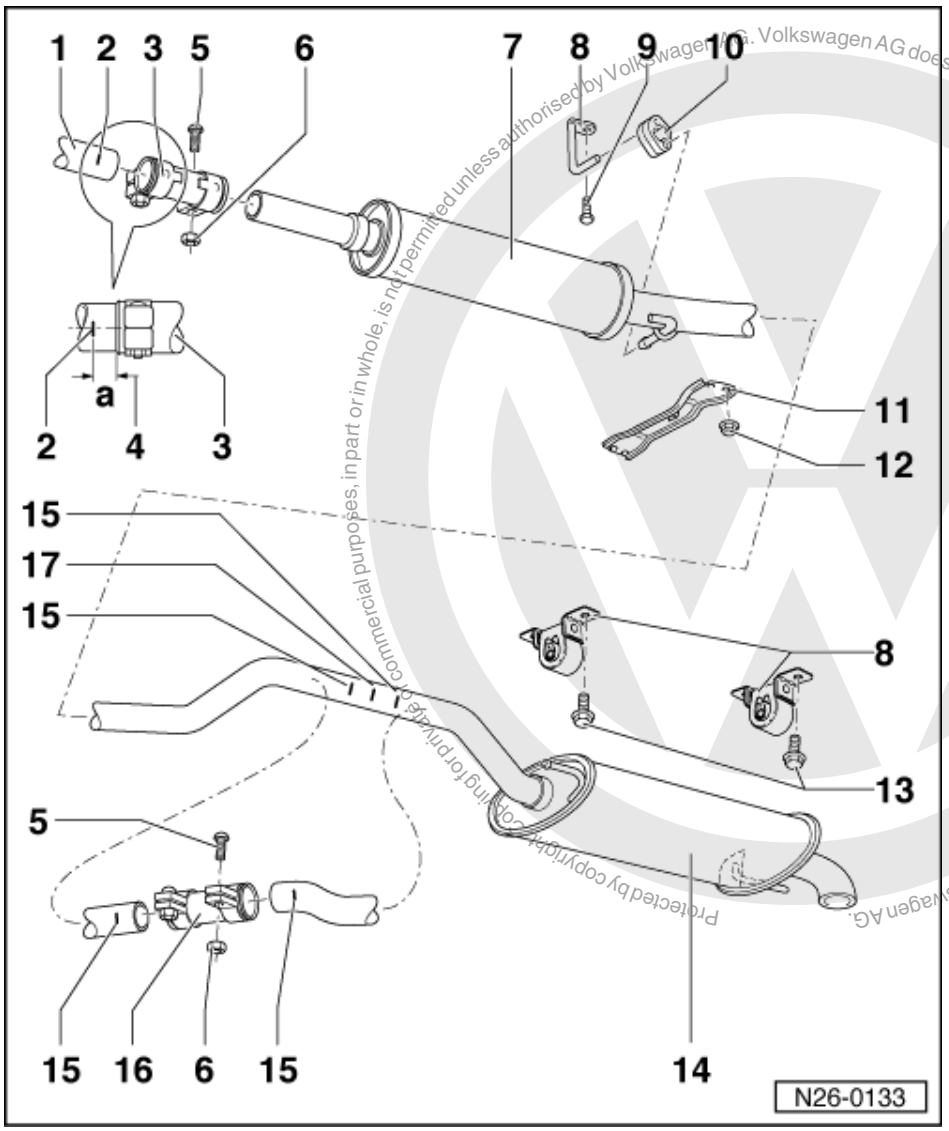

Protected by copyright. Copying for private or commercial purposes, in part or in whole, is not permitted unless authorised by Volkswagen AG. Volkswagen AG does not guarantee or accept any liability with respect to the correctness of information in this document. Copyright by Volkswagen AG.

satelettronica

10 Mounting
- Renew if damaged

11 Connecting piece

12 15 Nm

13 20 Nm + 1/4 turn (90 °) further

14 Rear silencer1)

15 Marking
- Three times on circumference
- Double clamp - 16 - for repairs

16 Repair double clamp
- Must be slid onto the markings - 15 -

17 Separating point
- For repair cases1)
- Marked by three impressions on circumference of connecting pipe

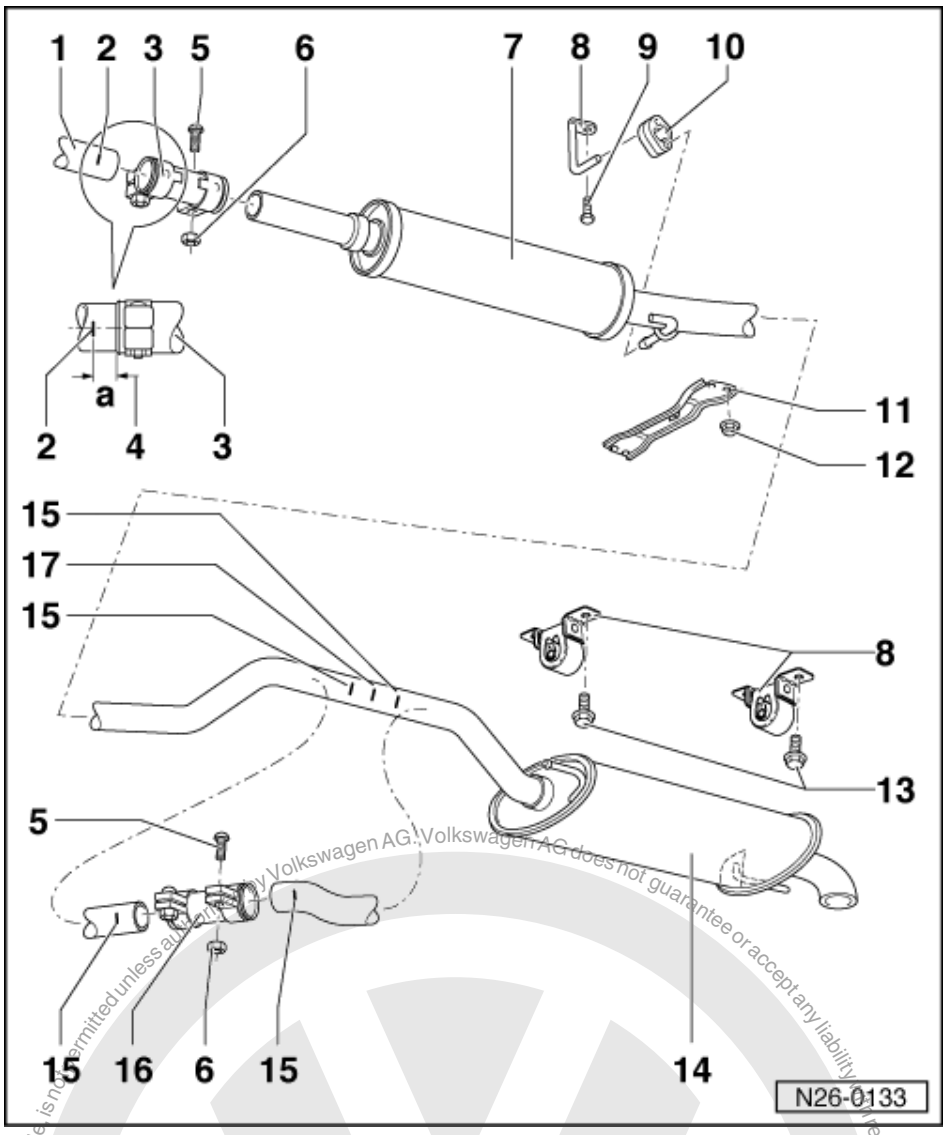

1) Front and rear silencers are installed as a single component as standard. In repair cases the front and rear silencers are supplied individually and a repair double clamp item 16 is supplied as a joint. Cut through connecting pipe at separating point - 17 - with a body saw e.g. V.A.G 1523.

Protected by copyright. Copying for private or commercial purposes, in part or whole, is not permitted unless authorised by Volkswagen AG. Volkswagen AG does not guarantee or accept any liability with respect to the correctness of information in this document. Copyright by Volkswagen AG.
satelettronica

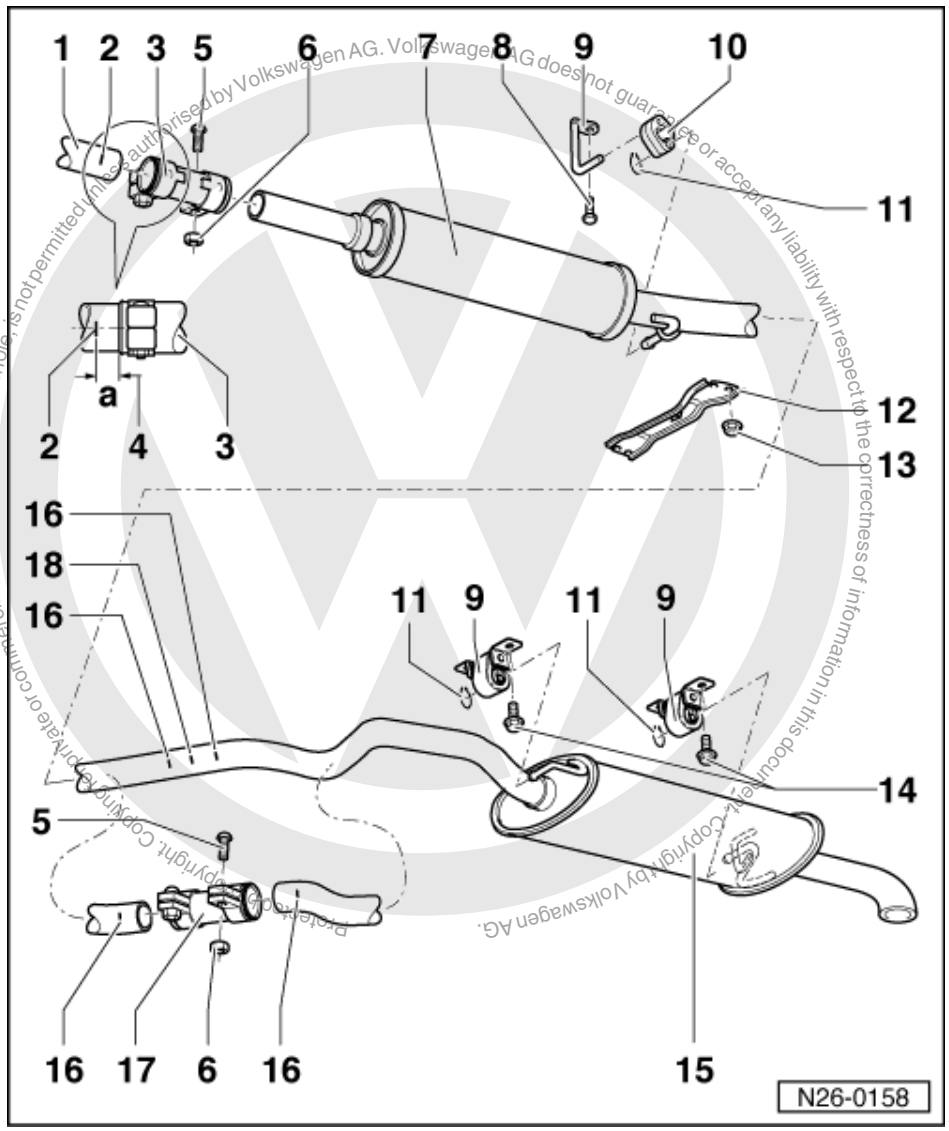

Silencer with mountings Polo Classic, Polo Estate

1 Front exhaust pipe with catalyst
2 Marking
- Three times on circumference
3 Double clamp
4 Dimension-a- = ca. 5 mm
5 Carriage bolt
6 40 Nm
7 Front silencer1)
8 25 Nm
9 Mounting

satelettronica

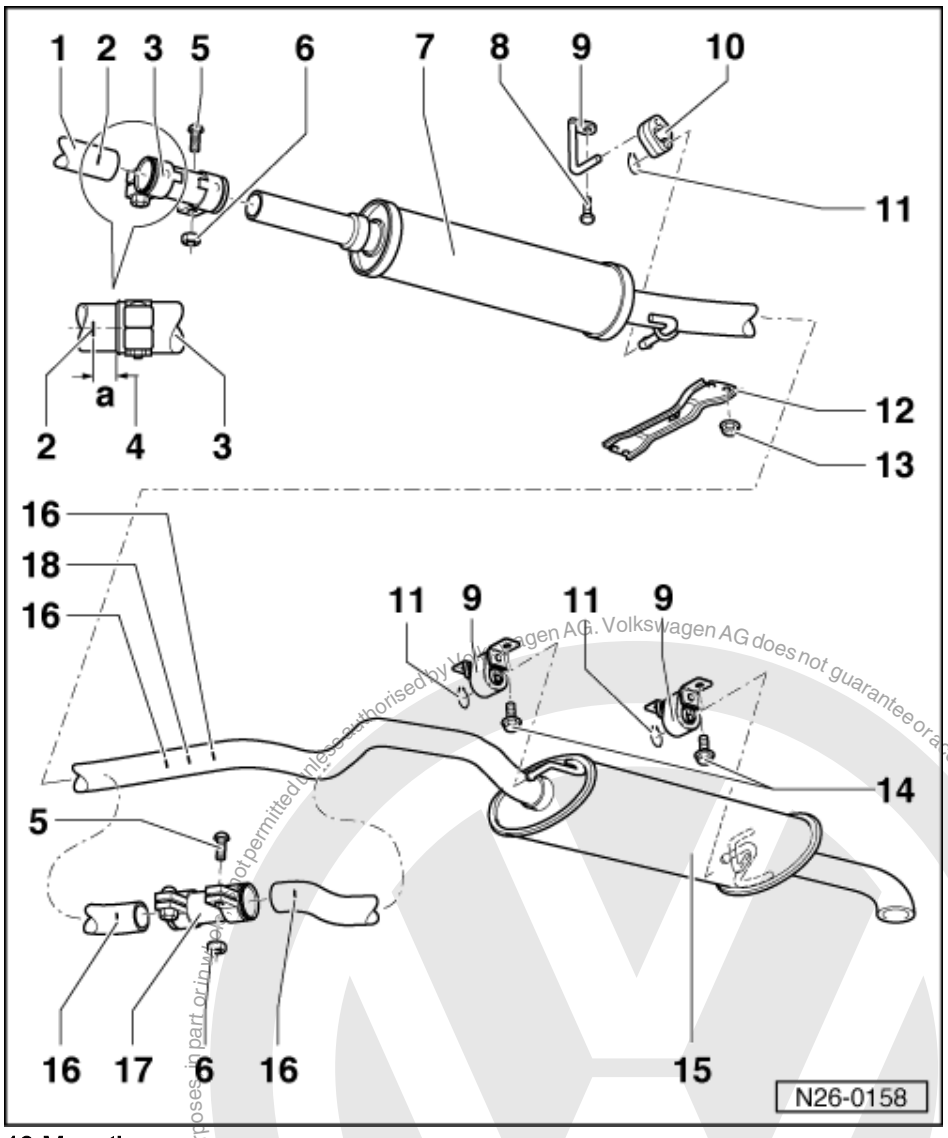

10 Mounting
- Renew if damaged

11 Circlip

12 Connecting piece

13 15 Nm

14 20 Nm + 1/4 turn (90 °) further

15 Rear silencer1)

16 Marking
- Three times on circumference
- Double clamp - 16 - for repairs

17 Repair double clamp
- Must be slid onto the markings - 15 -

Protected by copyright. Copying for private or commercial purposes, in part or in whole, is not permitted unless authorised by Volkswagen AG. Volkswagen AG does not guarantee or accept any liability with respect to the correctness of information in this document. Copyright by Volkswagen AG.
satelettronica

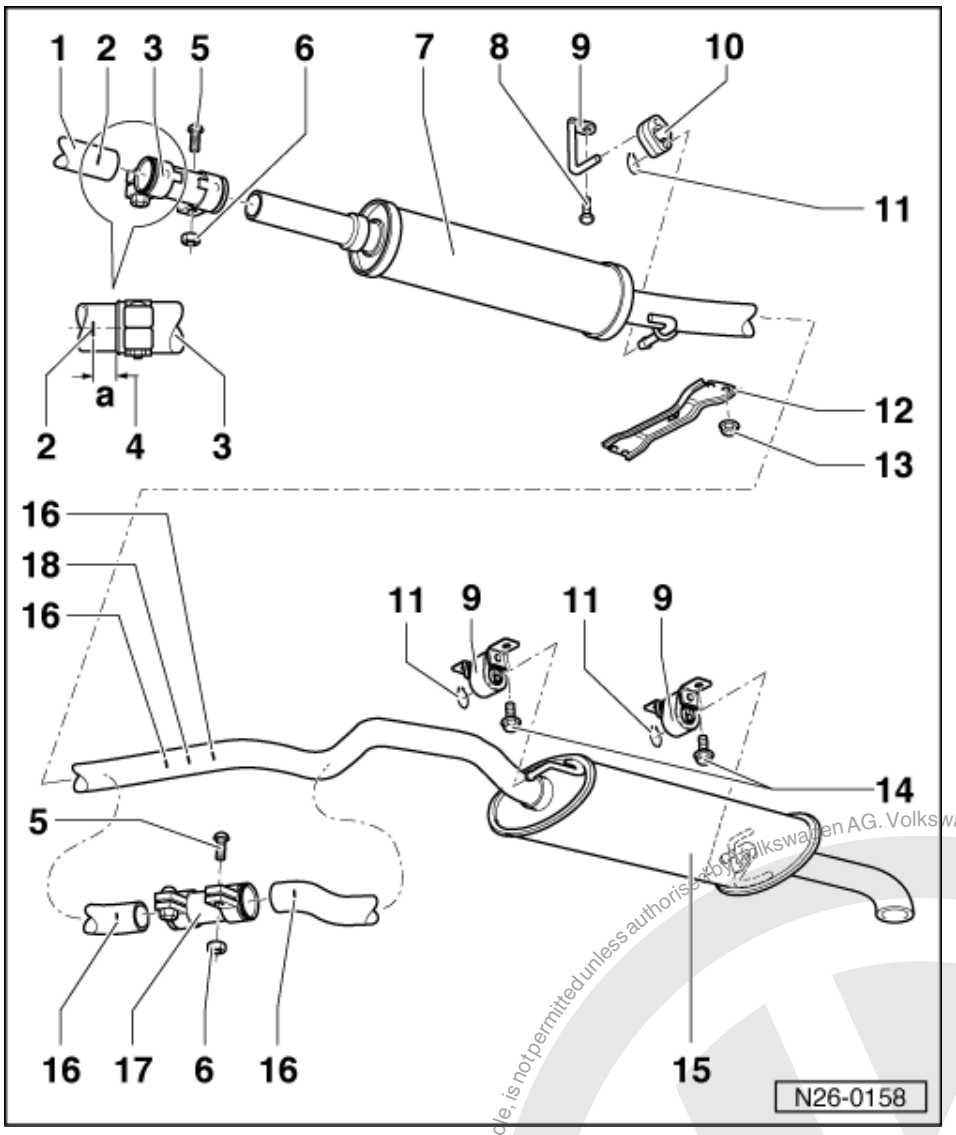

18 Separating point

- For repair cases1)
- Marked by three impressions on circumference of connecting pipe

1) Front and rear silencers are installed as a single component as standard. In repair cases the front and rear silencers are supplied individually and a repair double clamp item 16 is supplied as a joint. Cut through connecting pipe at separating point - 17 - with a body saw e.g. V.A.G 1523.

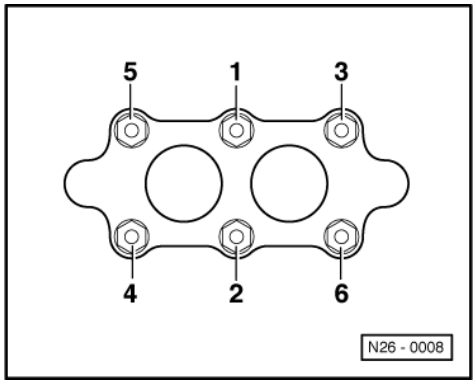

Protected by copyright. Copying for private or commercial purposes, in part or in whole, is not permitted unless authorised by Volkswagen AG. Volkswagen AG does not guarantee or accept any liability with respect to the correctness of information in this document. Copyright by Volkswagen AG.
satelettronica

-> Fig. 1 Tightening sequence exhaust pipe to exhaust manifold

Protected by copyright. Copying for private or commercial purposes, in part or in whole, is not permitted unless authorised by Volkswagen AG. Volkswagen AG does not guarantee or accept any liability with respect to the correctness of information in this document. Copyright by Volkswagen AG.

satelettronica